CASE FINISH	CURRENT (AMPS)	WORKING VOLTAGE -55°C TO +85°C AC	WORKING VOLTAGE -55°C TO +85°C DC	WORKING VOLTAGE -55°C TO +125°C AC	WORKING VOLTAGE -55°C TO +125°C DC	MAXIMUM DC RESISTANCE (OHMS)	MAXIMUM VOLTAGE DROP DC	MAXIMUM VOLTAGE DROP AC	MINIMUM CAPACITANCE (uF)
SOLDER	0.50	125	250	125	180	0.6	--	--	0.25

MIN. INSERTION LOSS PER MIL-STD-220 FULL LOAD, +25°C												
14 KHz	30 KHz	50 KHz	75 KHz	100 KHz	150 KHz	300 KHz	500 KHz	1 MHz	10 MHz	100 MHz	1 GHz	10 GHz
--	--	--	--	18	--	38	--	58	70	--	70	--

PART MARKING:
SCI
9000-100-0024
DATE CODE

PACKAGE MARKING:

STANDARD

MARKING NOTES:

N/A

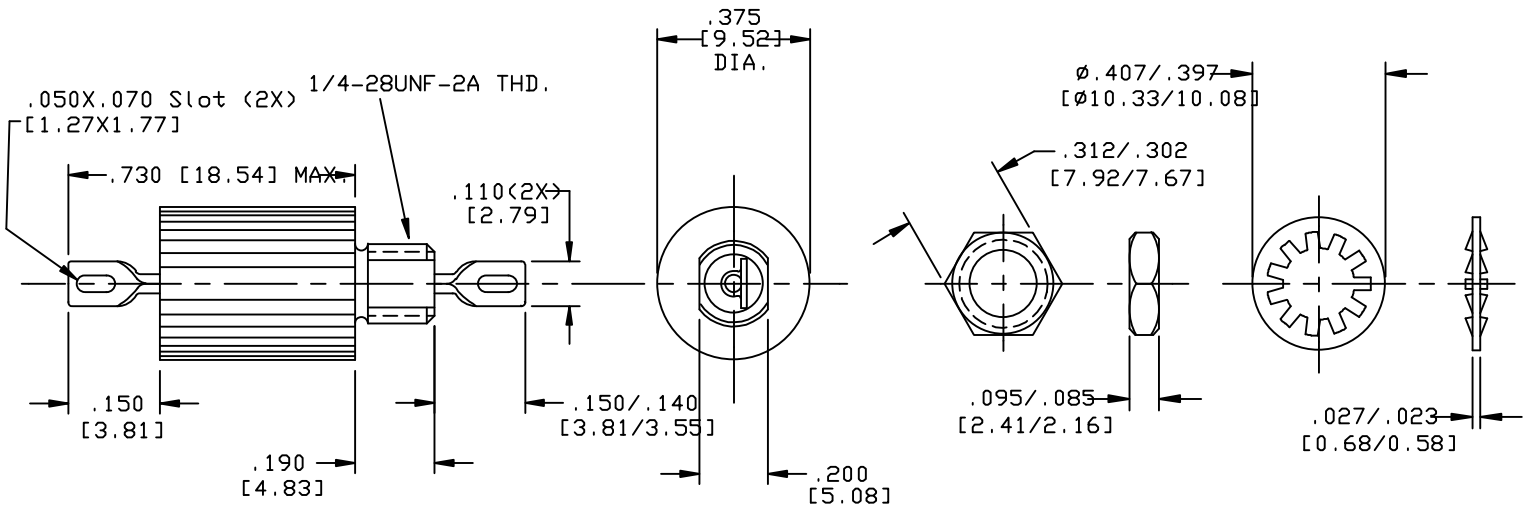

SCHEMATIC

MTG. HARDWARE

NOTES:

1) MOUNTING TORQUE NOT TO EXCEED 7in-lbs.

CN 184877	14	REV. NO.	UNLESS OTHERWISE SPECIFIED DIMENSIONS ARE IN INCHES. [MILLIMETERS] DO NOT SCALE.	TOLERANCES UNLESS OTHERWISE SPECIFIED Fractions Dec. .xx± Dec. .xxx±010 Angles ±0° 30'	SPECTRUM CONTROL INC. ERIE, FAIRVIEW PENNSYLVANIA
		CHANGE NOTICE		CODE IDENT. NO. OLSP2	Dwn MAYNARD Ckd 3/4/98 Sheet 1 of 1
					Description Low Pass EMI Filter 9000-100-0024

Quality Products From The Specialists In Electro-Magnetic Compatibility