CMD182-47
Filter Duplexer, TX 5.3 / RX 5.8

Revision 1, November 5, 2002

Transmit Channel		**Receive Channel**	
Passband:	**5250 – 5350 MHz**	**Passband:**	**5725 – 5825 MHz**
0.5 dB Bandwidth:	**100 MHz min.**	**0.5 dB Bandwidth:**	**100 MHz min.**
3.0 dB Bandwidth:	**200 MHz max.**	**3.0 dB Bandwidth:**	**200 MHz max.**
Insertion Loss:	**1.5 dB max.**	**Insertion Loss:**	**1.5 dB max.**
Ripple:	**0.2 dB max.**	**Ripple:**	**0.2 dB max.**
Group Delay:	**1.0 nS / 10 MHz**	**Group Delay:**	**1.0 nS / 10 MHz**
	8.0 nS over passband		**8.0 nS over passband**
Return Loss:	**18.0 dB min.**	**Return Loss:**	**18.0 dB min.**
Rejection:		**Rejection:**	
DC – 4500 MHz	**60 dB min**	**DC – 4500 MHz**	**60 dB min.**
6500 – 18000 MHz	**60 dB min.**	**6500 – 18000 MHz**	**60 dB min.**
Isolation Tx to Rx:	**60 dB min.**	**Isolation Rx to Tx:**	**60 dB min.**
2nd, 3rd Harmonic:	**100 dBc**	**2nd, 3rd Harmonic:**	**100 dBc**
Impedance:	**50 Ohms**	**Impedance:**	**50 Ohms**

Operation Temp:	**-40 to +80°C**
Storage Temp:	**-40 to +85°C**

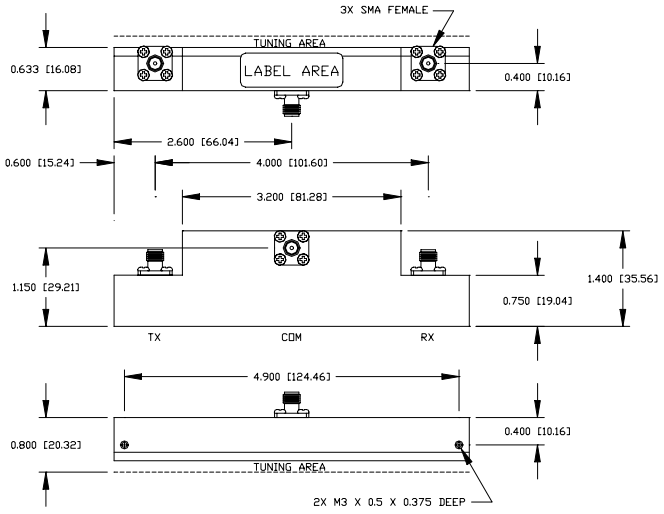

Commercial Microwave Technology, Inc.
11335 Sunrise Gold Circle, Suite B, Rancho Cordova, CA 95742
Phone: 916-631-4363 • Fax: 916-631-4364
www.cmtfilters.com