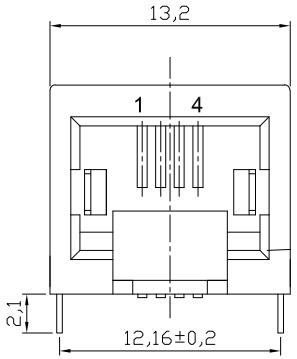

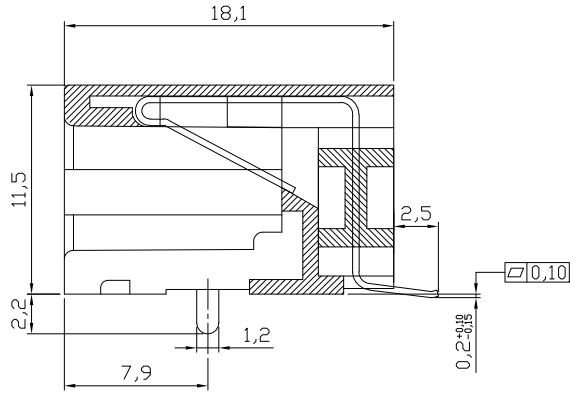

NOTES:
Mechanical:
1. Housing material : High Temp. UL94V-0 ,
Color: Black
2. Contact material: Phosphor Bronze t=0.35mm
3. Contact plating: 6u" Gold on contact area
Tin on solder side all over Nickel
4. Operating Life: 750 Cycles min.
5. PCB Retention Post-solder: 10 LBS min.
Electrical:
1. Voltage Rating: 125VAC.
2. Current Rating: 1.5AMP.
3. Contact Resistance: 35mΩ max.
4. Insulation Resistance: 1000MΩ min. @ 500 VDC
5. Dielectric Strength: 1000 VAC 60Hz, 1 min.
Environmental:
1. Storage: -40°C To +85°C
2. Operation: -40°C~+70°C
3. IR Reflow Soldering Temp: 255°C~265°C(5~10S)

Packing: 150pcs/Tape reel, 1500pcs/Carton

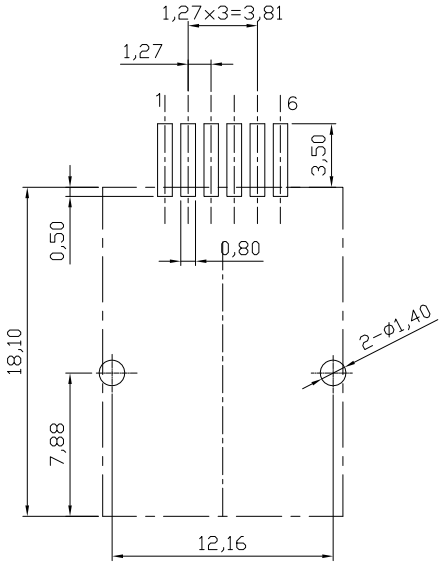

PCB Layout Component Side Shown(6P4C)

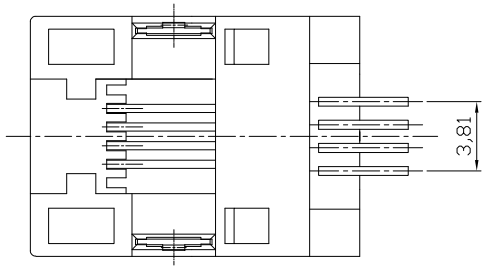

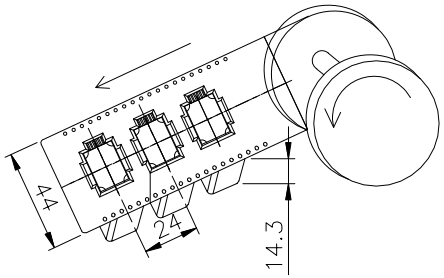

RoHS compliant
Unit:mm

Scale	Free						Date	Name	Customer-No.
TOLERANCE						Drawn	27.05.2013	Amy	
X.X	±0.20					Approved	27.05.2013	Amy	ASSMANN WSW-No. A-2004-0-4-LP/SMT-C
X.XX	±0.15								
X.XXX	±0.10								Drawing-No. ASS 5690 CO rev00
DIM	TOL								
		0	Drawn	27.05.2013	Amy				
Angle	±5°	Id.	Modification	Date	Name				Replace SHEET

ASSMANN WSW components