HIGH SPEED 2K x 8 DUAL PORT STATIC RAM

IDT7132SA/LA
IDT7142SA/LA

Features

- **High-speed access**
  - *Commercial: 20/25/35/55/100ns (max.)*
  - *Industrial: 25ns (max.)*
  - *Military: 25/35/55/100ns (max.)*
- **Low-power operation**
  - *IDT7132/42SA*
    Active: 325mW (typ.)
    Standby: 5mW (typ.)
  - *IDT7132/42LA*
    Active: 325mW (typ.)
    Standby: 1mW (typ.)
- **MASTER IDT7132 easily expands data bus width to 16-or-more bits using SLAVE IDT7142**
- **On-chip port arbitration logic (IDT7132 only)**
- **$\overline{BUSY}$ output flag on IDT7132; $\overline{BUSY}$ input on IDT7142**
- **Battery backup operation —2V data retention (LA only)**
- **TTL-compatible, single 5V ±10% power supply**
- **Available in 48-pin DIP, LCC and Flatpack, and 52-pin PLCC packages**
- **Military product compliant to MIL-PRF-38535 QML**
- **Industrial temperature range (–40°C to +85°C) is available for selected speeds**
- **Green parts available, see ordering information**

Functional Block Diagram

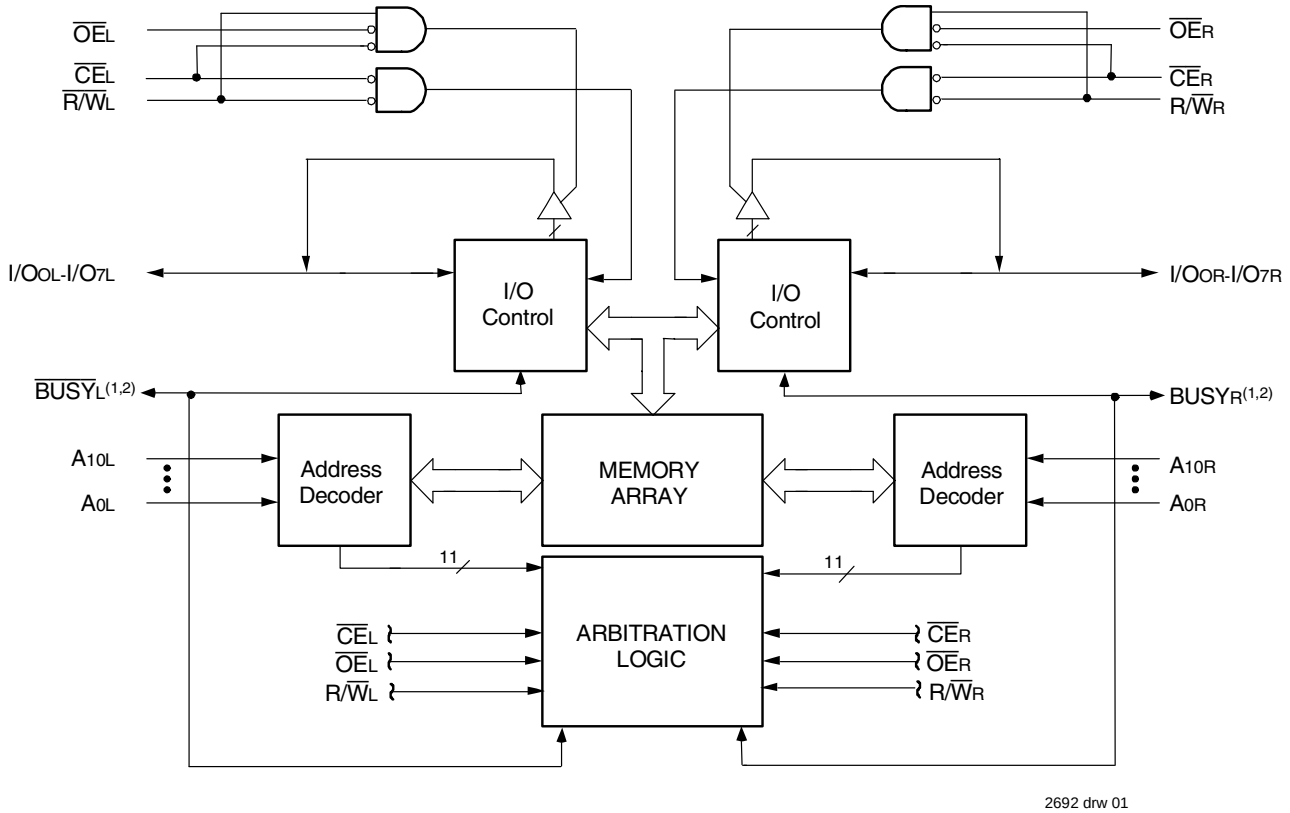

2692 drw 01

NOTES:

1. IDT7132 (MASTER): $\overline{BUSY}$ is open drain output and requires pullup resistor of 270Ω.
   IDT7142 (SLAVE): $\overline{BUSY}$ is input.
2. Open drain output: requires pullup resistor of 270Ω.

OCTOBER 2014

©2014 Integrated Device Technology, Inc.

DSC-2692/20

Description

The IDT7132/IDT7142 are high-speed 2K x 8 Dual-Port Static RAMs. The IDT7132 is designed to be used as a stand-alone 8-bit Dual-Port RAM or as a "MASTER" Dual-Port RAM together with the IDT7142 "SLAVE" Dual-Port in 16-bit-or-more word width systems. Using the IDT MASTER/SLAVE Dual-Port RAM approach in 16-or-more-bit memory system applications results in full-speed, error-free operation without the need for additional discrete logic.

Both devices provide two independent ports with separate control, address, and I/O pins that permit independent, asynchronous access for reads or writes to any location in memory. An automatic power down feature, controlled by $\overline{CE}$ permits the on-chip circuitry of each port to enter a very low standby power mode.

Fabricated using CMOS high-performance technology, these devices typically operate on only 325mW of power. Low-power (LA) versions offer battery backup data retention capability, with each Dual-Port typically consuming 200µW from a 2V battery.

The IDT7132/7142 devices are packaged in a 48-pin sidebraze or plastic DIPs, 48-pin LCCs, 52-pin PLCCs, and 48-lead flatpacks. Military grade product is manufactured in compliance with the latest revision of MIL-PRF-38535 QML, making it ideally suited to military temperature applications demanding the highest level of performance and reliability.

Pin Configurations(1,2,3)

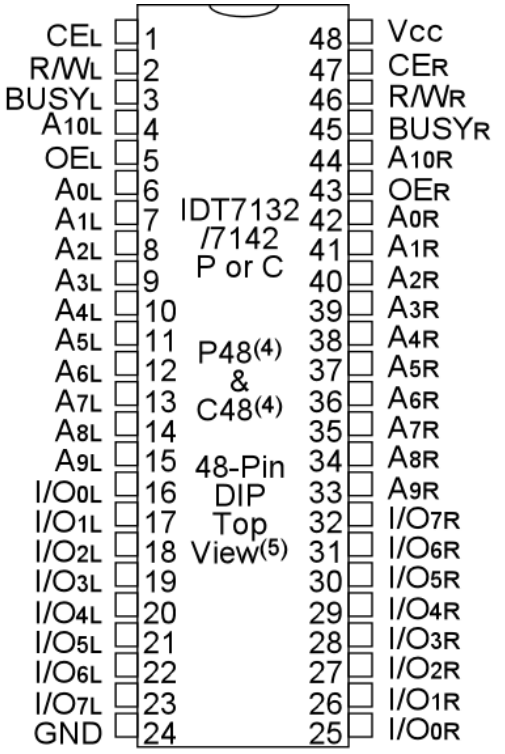

2692 drw 02

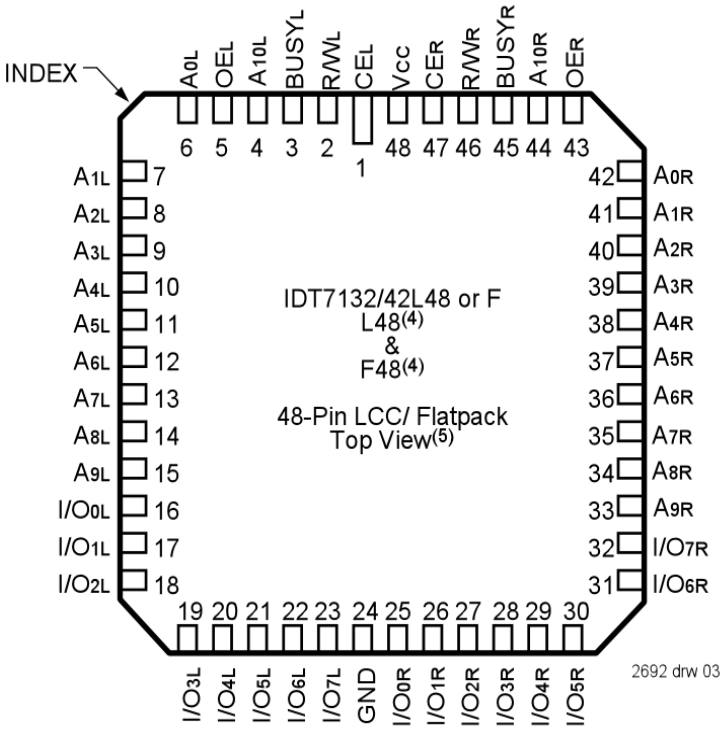

2692 drw 03

NOTES:
1. All VCC pins must be connected to the power supply.
2. All GND pins must be connected to the ground supply.
3. P48-1 package body is approximately .55 in x 2.43 in x .18 in.
   C48-2 package body is approximately .62 in x 2.43 in x .15 in.
   L48-1 package body is approximately .57 in x .57 in x .68 in.
   F48-1 package body is approximately .75 in x .75 in x .11 in.
4. This package code is used to reference the package diagram.
5. This text does not indicate orientation of the actual part-marking.

Capacitance(1) (TA = +25°C, f = 1.0MHz)

Symbol	Parameter	Conditions(2)	Max.	Unit
CIN	Input Capacitance	VIN = 3dV	11	pF
COUT	Output Capacitance	VOUT = 3dV	11	pF

2692 tbl 00

NOTES:
1. This parameter is determined by device characterization but is not production tested.
2. 3dV represents the interpolated capacitance when the input and output signals switch from 3V to 0V.

Pin Configurations[1,2,3] (con't.)

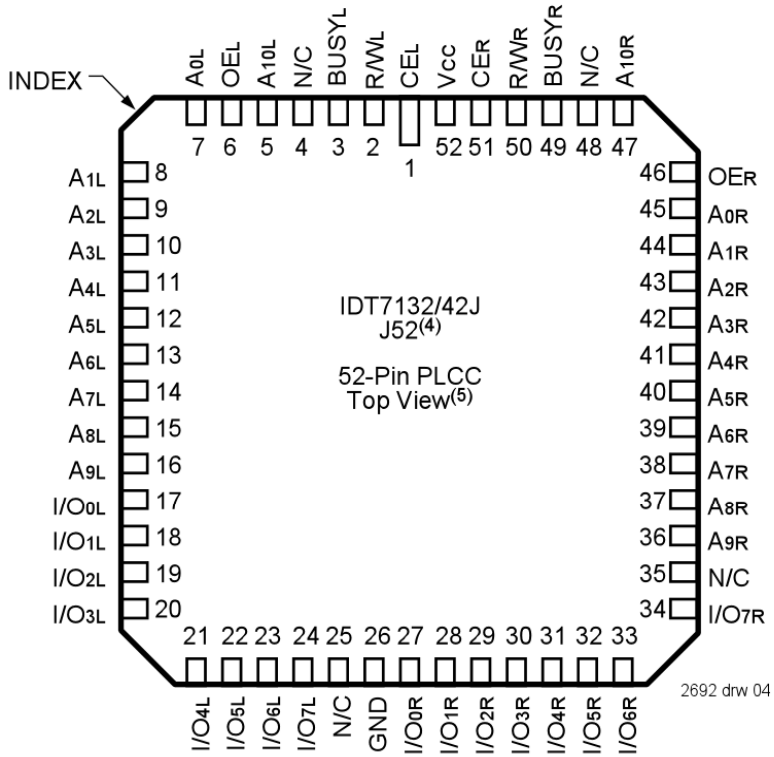

NOTES:
1. All Vcc pins must be connected to the power supply.
2. All GND pins must be connected to the ground supply.
3. Package body is approximately .75 in x .75 in x .17 in.
4. This package code is used to reference the package diagram.
5. This text does not indicate orientation of the actual part-marking.

Absolute Maximum Ratings[1]

Symbol	Rating	Commercial & Industrial	Military	Unit
V_{TERM}[2]	Terminal Voltage with Respect to GND	-0.5 to +7.0	-0.5 to +7.0	V
T_{BIAS}	Temperature Under Bias	-55 to +125	-65 to +135	°C
T_{STG}	Storage Temperature	-65 to +150	-65 to +150	°C
I_{OUT}	DC Output Current	50	50	mA

2692 tbl 01

NOTES:
1. Stresses greater than those listed under ABSOLUTE MAXIMUM RATINGS may cause permanent damage to the device. This is a stress rating only and functional operation of the device at these or any other conditions above those indicated in the operational sections of the specification is not implied. Exposure to absolute maximum rating conditions for extended periods may affect reliability.
2. VTERM must not exceed Vcc + 10% for more than 25% of the cycle time or 10ns maximum, and is limited to $\leq$ 20mA for the period of $V_{TERM} \geq$ Vcc + 10%.

Recommended Operating Temperature and Supply Voltage[1,2]

Grade	Ambient Temperature	GND	Vcc
Military	-55°C to+125°C	0V	5.0V ± 10%
Commercial	0°C to +70°C	0V	5.0V ± 10%
Industrial	-40°C to +85°C	0V	5.0V ± 10%

2692 tbl 02

NOTES:
1. This is the parameter T_A. This is the "instant on" case temperature.
2. Industrial temperature: for specific speeds, packages and powers contact your sales office.

Recommended DC Operating Conditions

Symbol	Parameter	Min.	Typ.	Max.	Unit
V_{CC}	Supply Voltage	4.5	5.0	5.5	V
GND	Ground	0	0	0	V
V_{IH}	Input High Voltage	2.2	—	6.0[2]	V
V_{IL}	Input Low Voltage	-0.5[1]	—	0.8	V

2692 tbl 03

NOTES:
1. V_{IL} (min.) = -1.5V for pulse width less than 10ns.
2. V_{TERM} must not exceed Vcc + 10%.

DC Electrical Characteristics Over the Operating Temperature and Supply Voltage Range(1,5,8) (V_{CC} = 5.0V ± 10%)

Symbol	Parameter	Test Condition	Version		7132X20(2) 7142X20(2) Com'l Only Typ.	Max.	7132X25(7) 7142X25(7) Com'l, Ind & Military Typ.	Max.	7132X35 7142X35 Com'l & Military Typ.	Max.	Unit
I_{CC}	Dynamic Operating Current (Both Ports Active)	$\overline{CE}_L = \overline{CE}_R = V_{IL}$, Outputs Disabled f = f_{MAX}(3)	COM'L	SA	110	250	110	220	80	165	mA
				LA	110	200	110	170	80	120	
			MIL & IND	SA	—	—	110	280	80	230	
				LA	—	—	110	220	80	170	
I_{SB1}	Standby Current (Both Ports - TTL Level Inputs)	$\overline{CE}_L = \overline{CE}_R = V_{IH}$, f = f_{MAX}(3)	COM'L	SA	30	65	30	65	25	65	mA
				LA	30	45	30	45	25	45	
			MIL & IND	SA	—	—	30	80	25	80	
				LA	—	—	30	60	25	60	
I_{SB2}	Standby Current (One Port - TTL Level Inputs)	$\overline{CE}$"A" = V_{IL} and $\overline{CE}$"B" = V_{IH}(6) Active Port Outputs Disabled f=f_{MAX}(3)	COM'L	SA	65	165	65	150	50	125	mA
				LA	65	125	65	115	50	90	
			MIL & IND	SA	—	—	65	160	50	150	
				LA	—	—	65	125	50	115	
I_{SB3}	Full Standby Current (Both Ports - All CMOS Level Inputs)	$\overline{CE}_L$ and $\overline{CE}_R \geq V_{CC}$ -0.2V $V_{IN} \geq V_{CC}$ -0.2V or $V_{IN} \leq$ 0.2V, f = 0(4)	COM'L	SA	1.0	15	1.0	15	1.0	15	mA
				LA	0.2	5	0.2	5	0.2	4	
			MIL & IND	SA	—	—	1.0	30	1.0	30	
				LA	—	—	0.2	10	0.2	10	
I_{SB4}	Full Standby Current (One Port - All CMOS Level Inputs)	$\overline{CE}$"A" $\leq$ 0.2V and $\overline{CE}$"B" $\geq V_{CC}$ -0.2V(6) $V_{IN} \geq V_{CC}$ - 0.2V or $V_{IN} \leq$ 0.2V Active Port Outputs Disabled f = f_{MAX}(3)	COM'L	SA	60	155	60	145	45	110	mA
				LA	60	115	60	105	45	85	
			MIL & IND	SA	—	—	60	155	45	145	
				LA	—	—	60	115	45	105	

2692 tbl 04a

Symbol	Parameter	Test Condition	Version		7132X55 7142X55 Com'l & Military Typ.	Max.	7132X100 7142X100 Com'l & Military Typ.	Max.	Unit
I_{CC}	Dynamic Operating Current (Both Ports Active)	$\overline{CE}_L = \overline{CE}_R = V_{IL}$, Outputs Disabled f = f_{MAX}(3)	COM'L	SA	65	155	65	155	mA
				LA	65	110	65	110	
			MIL & IND	SA	65	190	65	190	
				LA	65	140	65	140	
I_{SB1}	Standby Current (Both Ports - TTL Level Inputs)	$\overline{CE}_L = \overline{CE}_R = V_{IH}$, f = f_{MAX}(3)	COM'L	SA	20	65	20	55	mA
				LA	20	35	20	35	
			MIL & IND	SA	20	65	20	65	
				LA	20	45	20	45	
I_{SB2}	Standby Current (One Port - TTL Level Inputs)	$\overline{CE}$"A" = V_{IL} and $\overline{CE}$"B" = V_{IH}(6) Active Port Outputs Disabled f=f_{MAX}(3)	COM'L	SA	40	110	40	110	mA
				LA	40	75	40	75	
			MIL & IND	SA	40	125	40	125	
				LA	40	90	40	90	
I_{SB3}	Full Standby Current (Both Ports - All CMOS Level Inputs)	$\overline{CE}_L$ and $\overline{CE}_R \geq V_{CC}$ -0.2V $V_{IN} \geq V_{CC}$ -0.2V or $V_{IN} \leq$ 0.2V, f = 0(4)	COM'L	SA	1.0	15	1.0	15	mA
				LA	0.2	4	0.2	4	
			MIL & IND	SA	1.0	30	1.0	30	
				LA	0.2	10	0.2	10	
I_{SB4}	Full Standby Current (One Port - All CMOS Level Inputs)	$\overline{CE}$"A" $\leq$ 0.2V and $\overline{CE}$"B" $\geq V_{CC}$ -0.2V(6) $V_{IN} \geq V_{CC}$ - 0.2V or $V_{IN} \leq$ 0.2V Active Port Outputs Disabled f = f_{MAX}(3)	COM'L	SA	40	100	40	95	mA
				LA	40	70	40	70	
			MIL & IND	SA	40	110	40	110	
				LA	40	85	40	80	

2692 tbl 04b

NOTES:

1. 'X' in part numbers indicates power rating (SA or LA).
2. PLCC Package only
3. At f = f_{Max}, address and control lines (except Output Enable) are cycling at the maximum frequency read cycle of $1/t_{RC}$, and using "AC TEST CONDITIONS" of input levels of GND to 3V.
4. f = 0 means no address or control lines change. Applies only to inputs at CMOS level standby.
5. V_{CC} = 5V, T_A=+25°C for Typ and is not production tested. $V_{CC\,DC}$ = 100mA (Typ)
6. Port "A" may be either left or right port. Port "B" is opposite from port "A".
7. Not available in DIP packages.
8. Industrial temperature: for specific speeds, packages and powers contact your sales office.

DC Electrical Characteristics Over the Operating Temperature Supply Voltage Range (V_{CC} = 5.0V ± 10%)

Symbol	Parameter	Test Conditions	7132SA 7142SA		7132LA 7142LA		Unit
			Min.	Max.	Min.	Max.	
$\|I_{LI}\|$	Input Leakage Current(1)	V_{CC} = 5.5V, V_{IN} = 0V to V_{CC}	—	10	—	5	µA
$\|I_{LO}\|$	Output Leakage Current	V_{CC} = 5.5V, $\overline{CE}$ = V_{IH}, V_{OUT} = 0V to V_{CC}	—	10	—	5	µA
V_{OL}	Output Low Voltage	I_{OL} = 4mA	—	0.4	—	0.4	V
V_{OL}	Open Drain Output Low Voltage ($\overline{BUSY}$)	I_{OL} = 16mA	—	0.5	—	0.5	V
V_{OH}	Output High Voltage	I_{OH} = -4mA	2.4	—	2.4	—	V

2692 tbl 05

NOTE:
1. At $V_{CC} \leq$ 2.0V leakages are undefined.

Data Retention Characteristics (LA Version Only)

Symbol	Parameter	Test Condition		Min.	Typ.(1)	Max.	Unit
V_{DR}	V_{CC} for Data Retention	V_{CC} = 2.0V		2.0	—	—	V
I_{CCDR}	Data Retention Current	$\overline{CE} \geq V_{CC}$ -0.2V	Mil. & Ind.	—	100	4000	µA
		$V_{IN} \geq V_{CC}$ -0.2V or	Com'l.	—	100	1500	µA
t_{CDR}(3)	Chip Deselect to Data Retention Time	$V_{IN} \leq$ 0.2V		0	—	—	ns
t_R(3)	Operation Recovery Time			t_{RC}(2)	—	—	ns

2692 tbl 06

NOTES:
1. V_{CC} = 2V, T_A = +25°C, and is not production tested.
2. t_{RC} = Read Cycle Time
3. This parameter is guaranteed but not production tested.

Data Retention Waveform

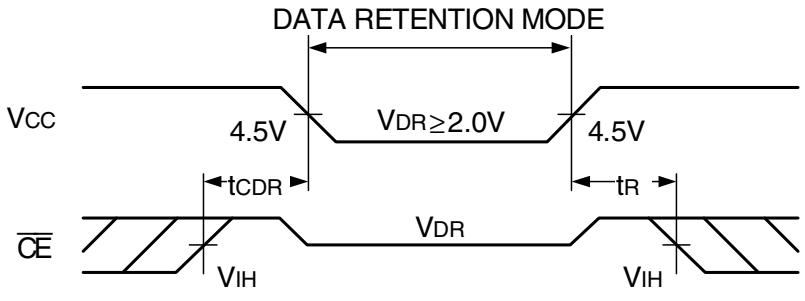

2692 drw 05

AC Test Conditions

Input Pulse Levels	GND to 3.0V
Input Rise/Fall Times	3ns Max.
Input Timing Reference Levels	1.5V
Output Reference Levels	1.5V
Output Load	Figures 1, 2, and 3

2692 tbl 07

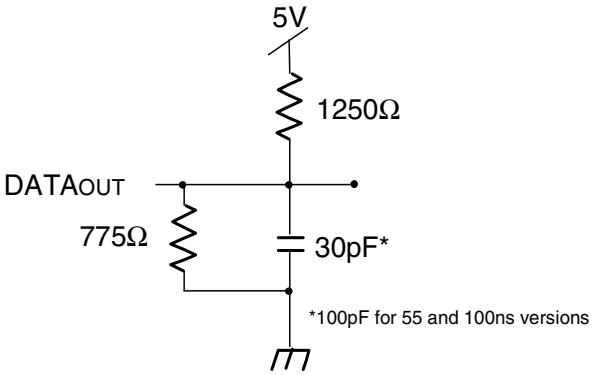

Figure 1. AC Output Test Load

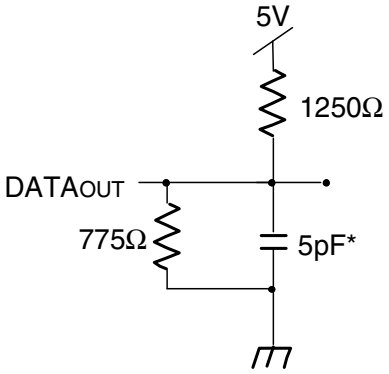

Figure 2. Output Test Load
(for t_{HZ}, t_{LZ}, t_{WZ}, and t_{OW})
* Including scope and jig

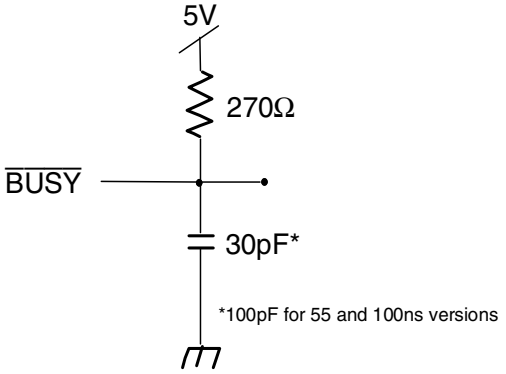

2692 drw 06

Figure 3. $\overline{BUSY}$ AC Output Test Load

AC Electrical Characteristics Over the Operating Temperature and Supply Voltage Range(3,5)

Symbol	Parameter	7132X20(2) 7142X20(2) Com'l Only		7132X25(2) 7142X25(2) Com'l, Ind & Military		7132X35 7142X35 Com'l & Military		Unit
		Min.	Max.	Min.	Max.	Min.	Max.	
READ CYCLE								
t_{RC}	Read Cycle Time	20	—	25	—	35	—	ns
t_{AA}	Address Access Time	—	20	—	25	—	35	ns
t_{ACE}	Chip Enable Access Time	—	20	—	25	—	35	ns
t_{AOE}	Output Enable Access Time	—	11	—	12	—	20	ns
t_{OH}	Output Hold from Address Change	3	—	3	—	3	—	ns
t_{LZ}	Output Low-Z Time(1,4)	0	—	0	—	0	—	ns
t_{HZ}	Output High-Z Time(1,4)	—	10	—	10	—	15	ns
t_{PU}	Chip Enable to Power Up Time(4)	0	—	0	—	0	—	ns
t_{PD}	Chip Disable to Power Down Time(4)	—	20	—	25	—	35	ns

2692 tbl 08a

Symbol	Parameter	7132X55 7142X55 Com'l & Military		7132X100 7142X100 Com'l & Military		Unit
		Min.	Max.	Min.	Max.	
READ CYCLE						
t_{RC}	Read Cycle Time	55	—	100	—	ns
t_{AA}	Address Access Time	—	55	—	100	ns
t_{ACE}	Chip Enable Access Time	—	55	—	100	ns
t_{AOE}	Output Enable Access Time	—	25	—	40	ns
t_{OH}	Output Hold from Address Change	3	—	10	—	ns
t_{LZ}	Output Low-Z Time(1,4)	5	—	5	—	ns
t_{HZ}	Output High-Z Time(1,4)	—	25	—	40	ns
t_{PU}	Chip Enable to Power Up Time(4)	0	—	0	—	ns
t_{PD}	Chip Disable to Power Down Time(4)	—	50	—	50	ns

2692 tbl 08b

NOTES:
1. Transition is measured 0mV from Low or High-Impedance Voltage Output Test Load (Figure 2).
2. PLCC package only.
3. 'X' in part numbers indicates power rating (SA or LA).
4. This parameter is guaranteed by device characterization, but is not production tested.
5. Industrial temperature: for specific speeds, packages and powers contact your sales office.

Timing Waveform of Read Cycle No. 1, Either Side(1)

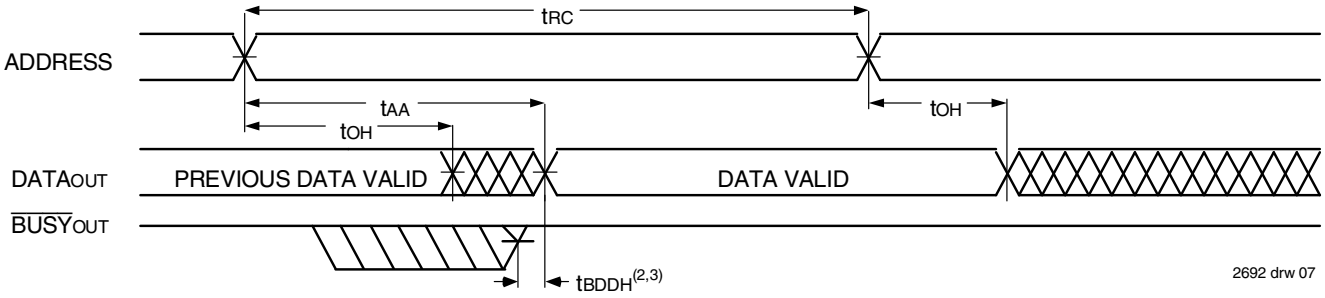

Timing Waveform of Read Cycle No. 2, Either Side(1)

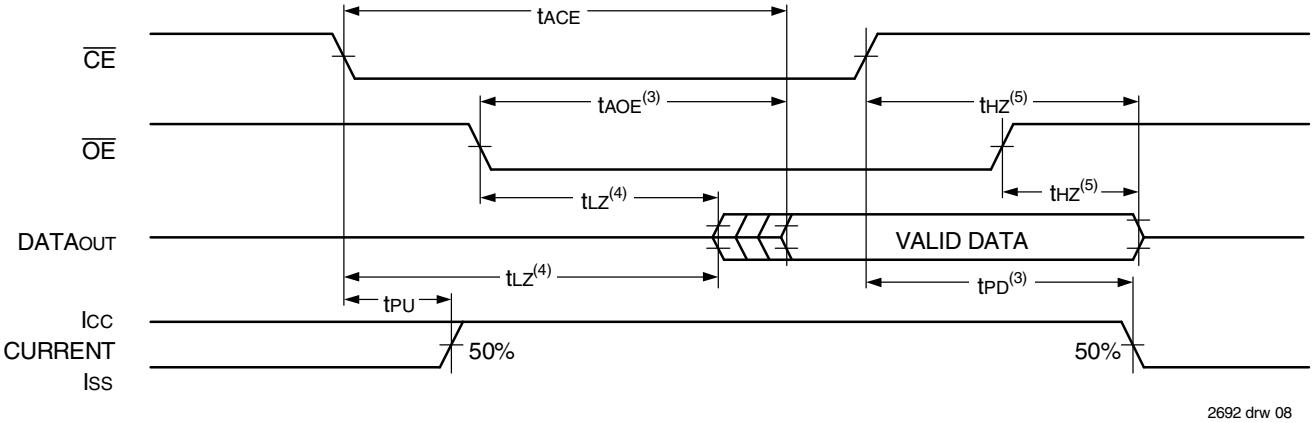

NOTES:

1. R/$\overline{W}$ = V_{IH}, $\overline{CE}$ = V_{IL}, and is $\overline{OE}$ = V_{IL}. Address is valid prior to the coincidental with $\overline{CE}$ transition LOW.
2. t_{BDD} delay is required only in the case where the opposite port is completing a write operation to the same address location. For simultaneous read operations, $\overline{BUSY}$ has no relationship to valid output data.
3. Start of valid data depends on which timing becomes effective last t_{AOE}, t_{ACE}, t_{AA}, and t_{BDD}.
4. Timing depends on which signal is asserted last, $\overline{OE}$ or $\overline{CE}$.
5. Timing depends on which signal is de-asserted first, $\overline{OE}$ or $\overline{CE}$.

AC Electrical Characteristics Over the Operating Temperature Supply Voltage Range(5,6)

Symbol	Parameter	7132X20(2) 7142X20(2) Com'l Only		7132X25(2) 7142X25(2) Com'l, Ind & Military		7132X35 7142X35 Com'l & Military		Unit
		Min.	Max.	Min.	Max.	Min.	Max.	
WRITE CYCLE								
t_{WC}	Write Cycle Time(3)	20	—	25	—	35	—	ns
t_{EW}	Chip Enable to End-of-Write	15	—	20	—	30	—	ns
t_{AW}	Address Valid to End-of-Write	15	—	20	—	30	—	ns
t_{AS}	Address Set-up Time	0	—	0	—	0	—	ns
t_{WP}	Write Pulse Width(4)	15	—	15	—	25	—	ns
t_{WR}	Write Recovery Time	0	—	0	—	0	—	ns
t_{DW}	Data Valid to End-of-Write	10	—	12	—	15	—	ns
t_{HZ}	Output High-Z Time(1)	—	10	—	10	—	15	ns
t_{DH}	Data Hold Time	0	—	0	—	0	—	ns
t_{WZ}	Write Enable to Output in High-Z(1)	—	10	—	10	—	15	ns
t_{OW}	Output Active from End-of-Write(1)	0	—	0	—	0	—	ns

2692 tbl 09

Symbol	Parameter	7132X55 7142X55 Com'l & Military		7132X100 7142X100 Com'l & Military		Unit
		Min.	Max.	Min.	Max.	
WRITE CYCLE						
t_{WC}	Write Cycle Time(3)	55	—	100	—	ns
t_{EW}	Chip Enable to End-of-Write	40	—	90	—	ns
t_{AW}	Address Valid to End-of-Write	40	—	90	—	ns
t_{AS}	Address Set-up Time	0	—	0	—	ns
t_{WP}	Write Pulse Width(4)	30	—	55	—	ns
t_{WR}	Write Recovery Time	0	—	0	—	ns
t_{DW}	Data Valid to End-of-Write	20	—	40	—	ns
t_{HZ}	Output High-Z Time(1)	—	25	—	40	ns
t_{DH}	Data Hold Time	0	—	0	—	ns
t_{WZ}	Write Enable to Output in High-Z(1)	—	30	—	40	ns
t_{OW}	Output Active from End-of-Write(1)	0	—	0	—	ns

2692 tbl 10

NOTES:

1. Transition is measured 0mV from Low or High-impedance voltage with Output Test Load (Figure 2). This parameter is guaranteed by device characterization but is not production tested.
2. PLCC package only.
3. For Master/Slave combination, $t_{WC} = t_{BAA} + t_{WP}$, since R/W = V_{IL} must occur after t_{BAA}.
4. If $\overline{OE}$ is LOW during a R/$\overline{W}$ controlled write cycle, the write pulse width must be the larger of t_{WP} or ($t_{WZ} + t_{DW}$) to allow the I/O drivers to turn off data to be placed on the bus for the required t_{DW}. If $\overline{OE}$ is High during a R/$\overline{W}$ controlled write cycle, this requirement does not apply and the write pulse can be as short as the specified t_{WP}.
5. 'X' in part numbers indicates power rating (SA or LA).
6. Industrial temperature: for specific speeds, packages and powers contact your sales office.

Timing Waveform of Write Cycle No. 1, (R/$\overline{W}$ Controlled Timing)(1,5,8)

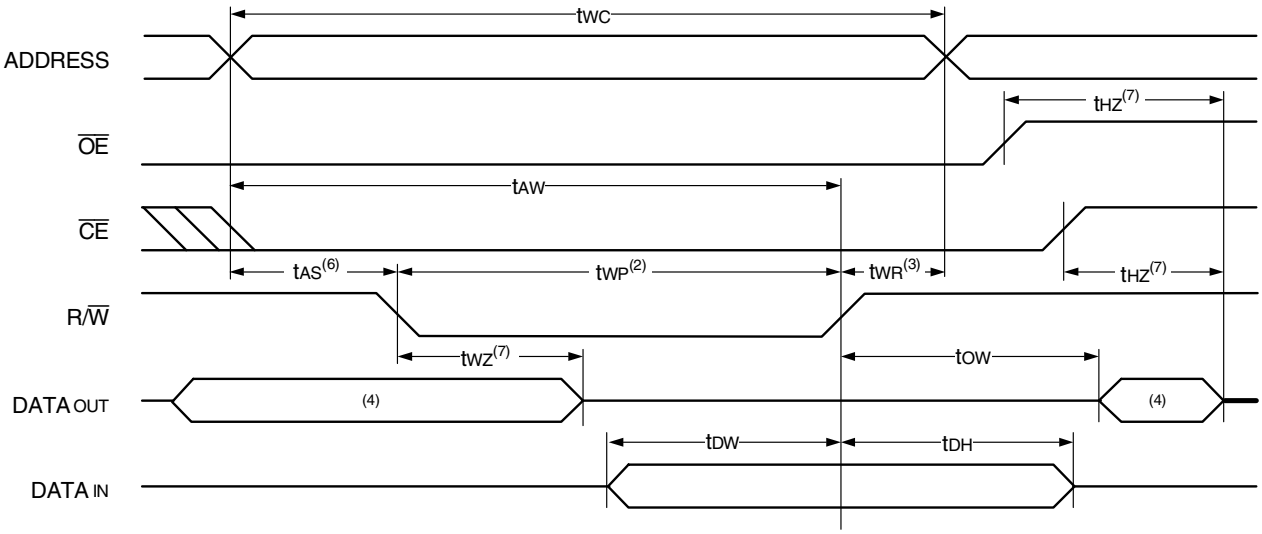

2692 drw 09

Timing Waveform of Write Cycle No. 2, ($\overline{CE}$ Controlled Timing)(1,5)

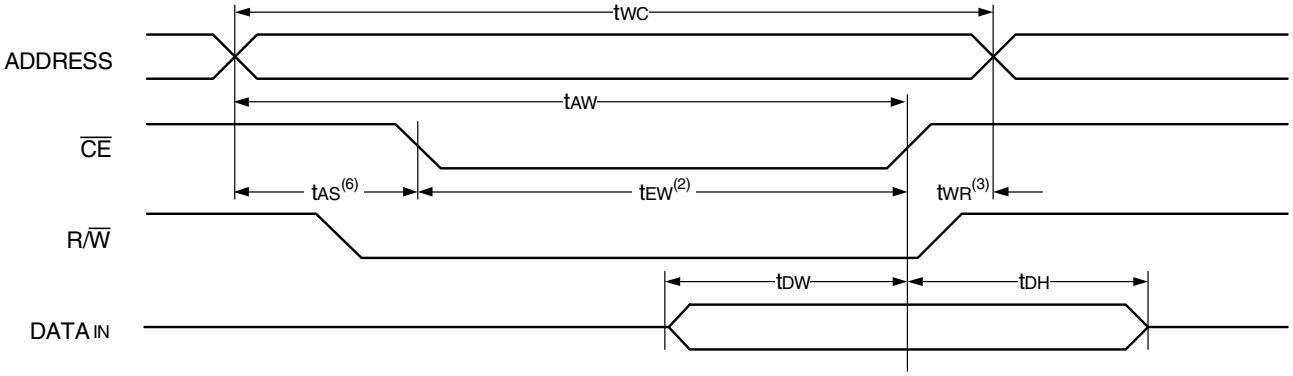

2692 drw 10

NOTES:

1. R/$\overline{W}$ or $\overline{CE}$ must be HIGH during all address transitions.
2. A write occurs during the overlap (t_{EW} or t_{WP}) of $\overline{CE}$ = V_{IL} and R/$\overline{W}$ = V_{IL}.
3. t_{WR} is measured from the earlier of $\overline{CE}$ or R/$\overline{W}$ going HIGH to the end of the write cycle.
4. During this period, the I/O pins are in the output state and input signals must not be applied.
5. If the $\overline{CE}$ LOW transition occurs simultaneously with or after the R/$\overline{W}$ LOW transition, the outputs remain in the High-impedance state.
6. Timing depends on which enable signal (CE or R/W) is asserted last.
7. This parameter is determined be device characterization, but is not production tested. Transition is measured 0mV from steady state with the Output Test Load (Figure 2).
8. If $\overline{OE}$ is LOW during a R/$\overline{W}$ controlled write cycle, the write pulse width must be the larger of t_{WP} or (t_{WZ} + t_{DW}) to allow the I/O drivers to turn off data to be placed on the bus for the required t_{DW}. If $\overline{OE}$ is HIGH during a R/$\overline{W}$ controlled write cycle, this requirement does not apply and the write pulse can be as short as the specified t_{WP}.

AC Electrical Characteristics Over the Operating Temperature and Supply Voltage Range(7,8)

Symbol	Parameter	7132X20(1) 7142X20(1) Com'l Only		7132X25(2) 7142X25(2) Com'l, Ind & Military		7132X35 7142X35 Com'l & Military		Unit
		Min.	Max.	Min.	Max.	Min.	Max.	
$\overline{BUSY}$ Timing (For Master IDT7132 Only)								
t_{BAA}	$\overline{BUSY}$ Access Time from Address	—	20	—	20	—	20	ns
t_{BDA}	$\overline{BUSY}$ Disable Time from Address	—	20	—	20	—	20	ns
t_{BAC}	$\overline{BUSY}$ Access Time from Chip Enable	—	20	—	20	—	20	ns
t_{BDC}	$\overline{BUSY}$ Disable Time from Chip Enable	—	20	—	20	—	20	ns
t_{WDD}	Write Pulse to Data Delay(2)	—	50	—	50	—	60	ns
t_{WH}	Write Hold After $\overline{BUSY}$(6)	12	—	15	—	20	—	ns
t_{DDD}	Write Data Valid to Read Data Delay(2)	—	35	—	35	—	35	ns
t_{APS}	Arbitration Priority Set-up Time(3)	5	—	5	—	5	—	ns
t_{BDD}	$\overline{BUSY}$ Disable to Valid Data(4)	—	25	—	35	—	35	ns
$\overline{BUSY}$ Timing (For Slave IDT7142 Only)								
t_{WB}	Write to $\overline{BUSY}$ Input(5)	0	—	0	—	0	—	ns
t_{WH}	Write Hold After $\overline{BUSY}$(6)	12	—	15	—	20	—	ns
t_{WDD}	Write Pulse to Data Delay(2)	—	40	—	50	—	60	ns
t_{DDD}	Write Data Valid to Read Data Delay(2)	—	30	—	35	—	35	ns

2692 tbl 11a

Symbol	Parameter	7132X55 7142X55 Com'l & Military		7132X100 7142X100 Com'l & Military		Unit
		Min.	Max.	Min.	Max.	
$\overline{BUSY}$ Timing (For Master IDT7132 Only)						
t_{BAA}	$\overline{BUSY}$ Access Time from Address	—	30	—	50	ns
t_{BDA}	$\overline{BUSY}$ Disable Time from Address	—	30	—	50	ns
t_{BAC}	$\overline{BUSY}$ Access Time from Chip Enable	—	30	—	50	ns
t_{BDC}	$\overline{BUSY}$ Disable Time from Chip Enable	—	30	—	50	ns
t_{WDD}	Write Pulse to Data Delay(2)	—	80	—	120	ns
t_{WH}	Write Hold After $\overline{BUSY}$(6)	20	—	20	—	ns
t_{DDD}	Write Data Valid to Read Data Delay(2)	—	55	—	100	ns
t_{APS}	Arbitration Priority Set-up Time(3)	5	—	5	—	ns
t_{BDD}	$\overline{BUSY}$ Disable to Valid Data(4)	—	50	—	65	ns
$\overline{BUSY}$ Timing (For Slave IDT7142 Only)						
t_{WB}	Write to $\overline{BUSY}$ Input(5)	0	—	0	—	ns
t_{WH}	Write Hold After $\overline{BUSY}$(6)	20	—	20	—	ns
t_{WDD}	Write Pulse to Data Delay(2)	—	80	—	120	ns
t_{DDD}	Write Data Valid to Read Data Delay(2)	—	55	—	100	ns

2692 tbl 11b

NOTES:

1. PLCC package only.
2. Port-to-port delay through RAM cells from the writing port to the reading port, refer to “Timing Waveform of Write with Port -to-Port Read and BUSY.”
3. To ensure that the earlier of the two ports wins.
4. t_{BDD} is a calculated parameter and is the greater of 0, $t_{WDD} – t_{WP}$ (actual) or $t_{DDD} – t_{DW}$ (actual).
5. To ensure that a write cycle is inhibited on port "B" during contention on port "A".
6. To ensure that a write cycle is completed on port "B" after contention on port "A".
7. 'X' in part numbers indicates power rating (SA or LA).
8. Industrial temperature: for specific speeds, packages and powers contact your sales office.

Timing Waveform of Write with Port-to-Port Read and $\overline{\text{BUSY}}$(2,3,4)

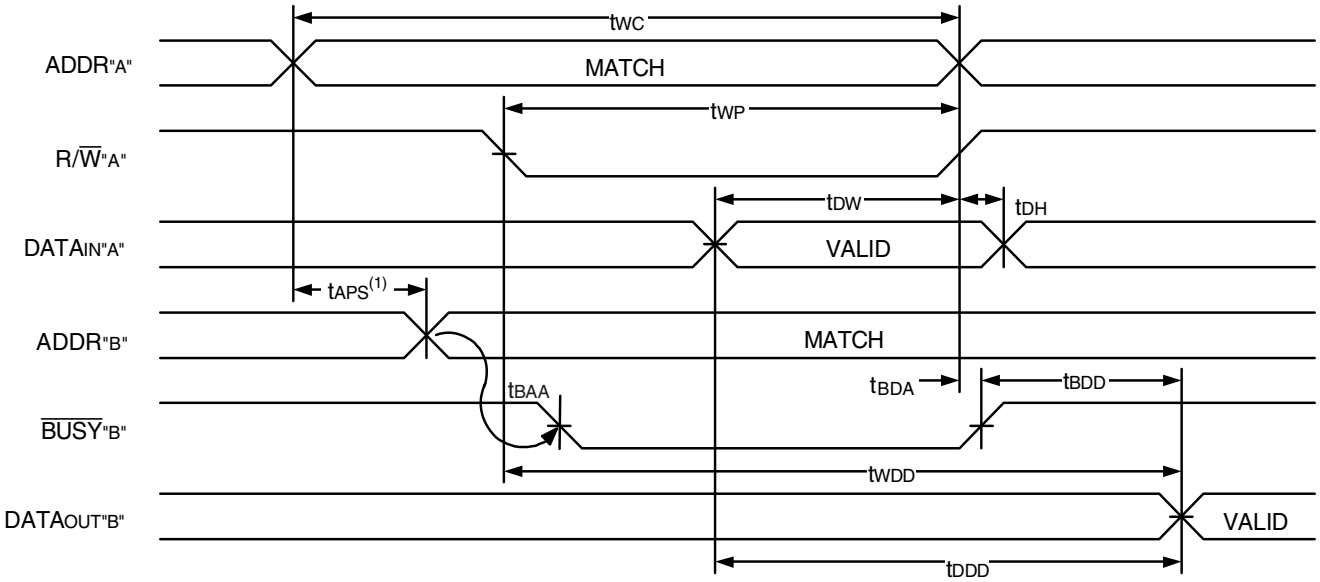

2692 drw 11

NOTES:

1. To ensure that the earlier of the two ports wins. t_{APS} is ignored for Slave (IDT7142).
2. $\overline{CE}_L = \overline{CE}_R = V_{IL}$
3. $\overline{OE} = V_{IL}$ for the reading port.
4. All timing is the same for the left and right ports. Port "A" may be either the left or right port. Port "B" is opposite from port "A".

Timing Waveform of Write with $\overline{\text{BUSY}}$(4)

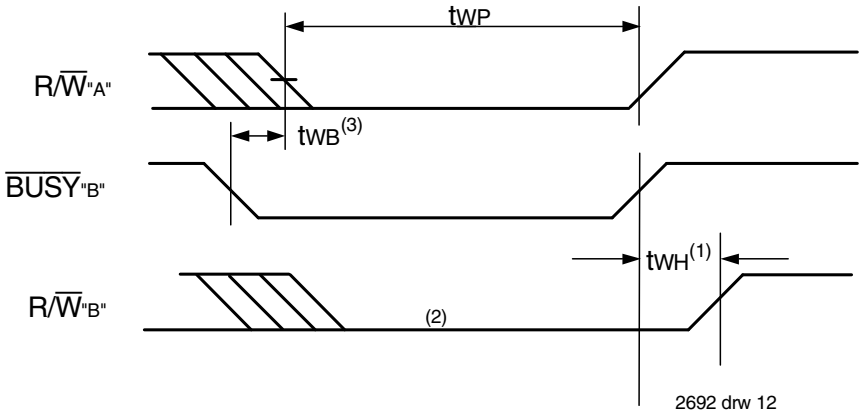

2692 drw 12

NOTES:

1. t_{WH} must be met for both $\overline{BUSY}$ Input (IDT7142, slave) or Output (IDT7132, master).
2. $\overline{BUSY}$ is asserted on port "B" blocking $R/\overline{W}_{"B"}$, until $\overline{BUSY}_{"B"}$ goes HIGH.
3. t_{WB} applies only to the slave version (IDT7142).
4. All timing is the same for the left and right ports. Port 'A' may be either the left or right port. Port "B" is opposite from port "A".

Timing Waveform of $\overline{\text{BUSY}}$ Arbitration Controlled by $\overline{\text{CE}}$ Timing(1)

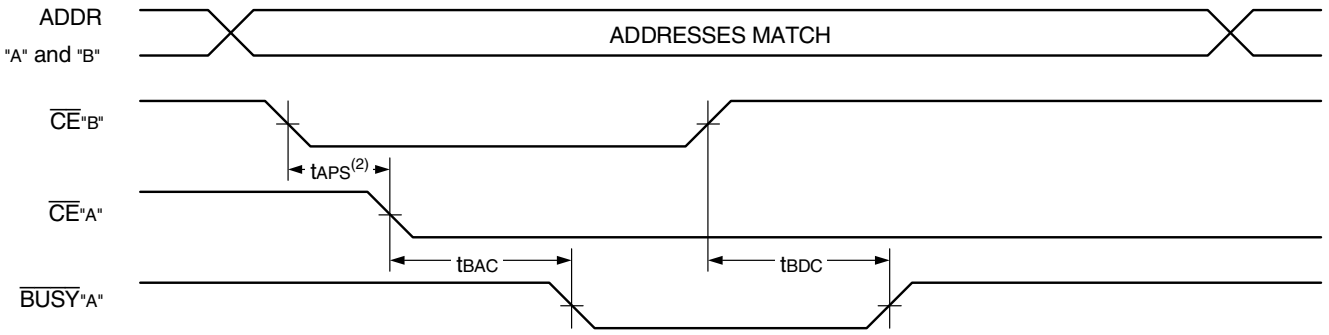

2692 drw 13

Timing Waveform of $\overline{\text{BUSY}}$ Arbitration Controlled by Address Match Timing(1)

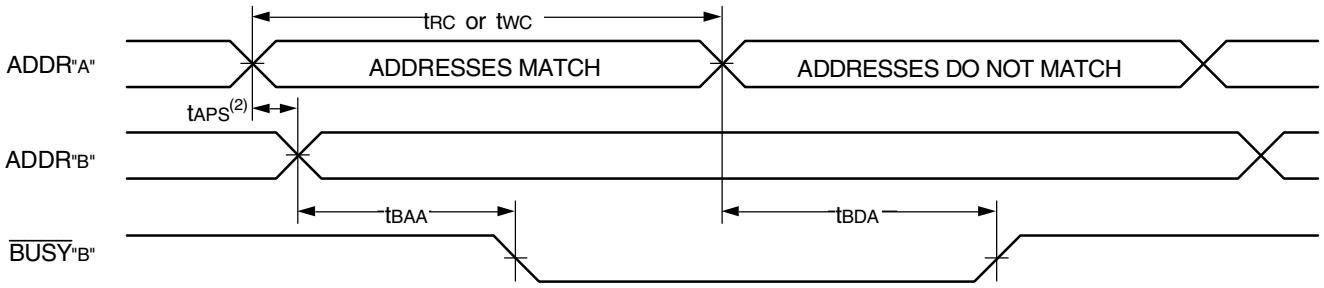

2692 drw 14

NOTES:
1. All timing is the same for left and right ports. Port "A" may be either left or right port. Port "B" is the opposite from port "A".
2. If t_{APS} is not satisified, the $\overline{\text{BUSY}}$ will be asserted on one side or the other, but there is no guarantee on which side $\overline{\text{BUSY}}$ will be asserted (7132 only).

Truth Tables

Table I. Non-Contention Read/Write Control(4)

Left or Right Port(1)				
R/$\overline{\text{W}}$	$\overline{\text{CE}}$	$\overline{\text{OE}}$	D_{0-7}	Function
X	H	X	Z	Port Disabled and in Power-Down Mode, I_{SB2} or I_{SB4}
X	H	X	Z	$\overline{\text{CE}}_R = \overline{\text{CE}}_L = V_{IH}$, Power-Down Mode, I_{SB1} or I_{SB3}
L	L	X	$DATA_{IN}$	Data on Port Written into Memory(2)
H	L	L	$DATA_{OUT}$	Data in Memory Output on Port(3)
X	L	H	Z	High Impedance Outputs

2692 tbl 12

NOTES:
1. $A_{0L} - A_{10L} \neq A_{0R} - A_{10R}$
2. If $\overline{\text{BUSY}}$ = L, data is not written.
3. If $\overline{\text{BUSY}}$ = L, data may not be valid, see t_{WDD} and t_{DDD} timing.
4. 'H' = V_{IH}, 'L' = V_{IL}, 'X' = DON'T CARE, 'Z' = HIGH IMPEDANCE

Table II — Address $\overline{\text{BUSY}}$ Arbitration

Inputs			Outputs		
$\overline{CE}_L$	$\overline{CE}_R$	A_{OL}-A_{10L} A_{OR}-A_{10R}	$\overline{BUSY}_L$(1)	$\overline{BUSY}_R$(1)	Function
X	X	NO MATCH	H	H	Normal
H	X	MATCH	H	H	Normal
X	H	MATCH	H	H	Normal
L	L	MATCH	(2)	(2)	Write Inhibit(3)

2692 tbl 13

NOTES:

1. Pins $\overline{BUSY}_L$ and $\overline{BUSY}_R$ are both outputs for IDT7132 (master). Both are inputs for IDT7142 (slave). $\overline{BUSY}_X$ outputs on the IDT7132 are open drain, not push-pull outputs. On slaves the $\overline{BUSY}_X$ input internally inhibits writes.
2. 'L' if the inputs to the opposite port were stable prior to the address and enable inputs of this port. 'H' if the inputs to the opposite port became stable after the address and enable inputs of this port. If t_{APS} is not met, either $\overline{BUSY}_L$ or $\overline{BUSY}_R$ = LOW will result. $\overline{BUSY}_L$ and $\overline{BUSY}_R$ outputs can not be LOW simultaneously.
3. Writes to the left port are internally ignored when $\overline{BUSY}_L$ outputs are driving LOW regardless of actual logic level on the pin. Writes to the right port are internally ignored when $\overline{BUSY}_R$ outputs are driving LOW regardless of actual logic level on the pin.

Functional Description

The IDT7132/IDT7142 provides two ports with separate control, address and I/O pins that permit independent access for reads or writes to any location in memory. The IDT7132/IDT7142 has an automatic power down feature controlled by $\overline{CE}$. The $\overline{CE}$ controls on-chip power down circuitry that permits the respective port to go into a standby mode when not selected ($\overline{CE}$ = VIH). When a port is enabled, access to the entire memory array is permitted.

Busy Logic

Busy Logic provides a hardware indication that both ports of the RAM have accessed the same location at the same time. It also allows one of the two accesses to proceed and signals the other side that the RAM is "Busy". The $\overline{BUSY}$ pin can then be used to stall the access until the operation on the other side is completed. If a write operation has been attempted from the side that receives a busy indication, the write signal is gated internally to prevent the write from proceeding.

The use of $\overline{BUSY}$ Logic is not required or desirable for all applications. In some cases it may be useful to logically OR the $\overline{BUSY}$ outputs together and use any $\overline{BUSY}$ indication as an interrupt source to flag the event of an illegal or illogical operation.

The $\overline{BUSY}$ outputs on the IDT7132 RAM master are open drain type outputs and require open drain resistors to operate. If these RAMs are being expanded in depth, then the $\overline{BUSY}$ indication for the resulting array does not require the use of an external AND gate.

Width Expansion with Busy Logic Master/Slave Arrays

When expanding an SRAM array in width while using $\overline{BUSY}$ logic, one master part is used to decide which side of the SRAM array will receive a $\overline{BUSY}$ indication, and to output that indication. Any number of slaves to be addressed in the same address range as the master, use the $\overline{BUSY}$ signal as a write inhibit signal. Thus on the IDT7132/IDT7142 SRAMs the $\overline{BUSY}$ pin is an output if the part is Master (IDT7132), and the $\overline{BUSY}$ pin is an input if the part is a Slave (IDT7142) as shown in Figure 3.

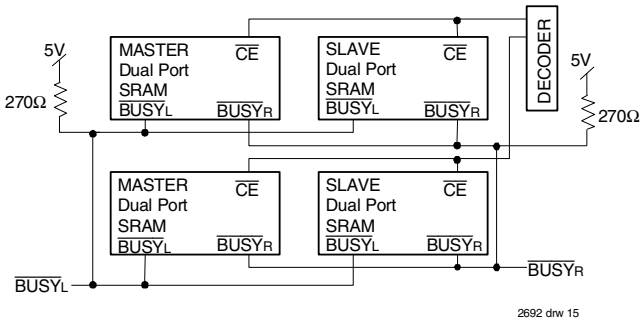

Figure 4. Busy and chip enable routing for both width and depth expansion with IDT7132 (Master) and (Slave) IDT7142 SRAMs.

If two or more master parts were used when expanding in width, a split decision could result with one master indicating $\overline{BUSY}$ on one side of the array and another master indicating $\overline{BUSY}$ on one other side of the array. This would inhibit the write operations from one port for part of a word and inhibit the write operations from the other port for the other part of the word.

The $\overline{BUSY}$ arbitration, on a Master, is based on the chip enable and address signals only. It ignores whether an access is a read or write. In a master/slave array, both address and chip enable must be valid long enough for a $\overline{BUSY}$ flag to be output from the master before the actual write pulse can be initiated with either the R/$\overline{W}$ signal or the byte enables. Failure to observe this timing can result in a glitched internal write inhibit signal and corrupted data in the slave.

Ordering Information

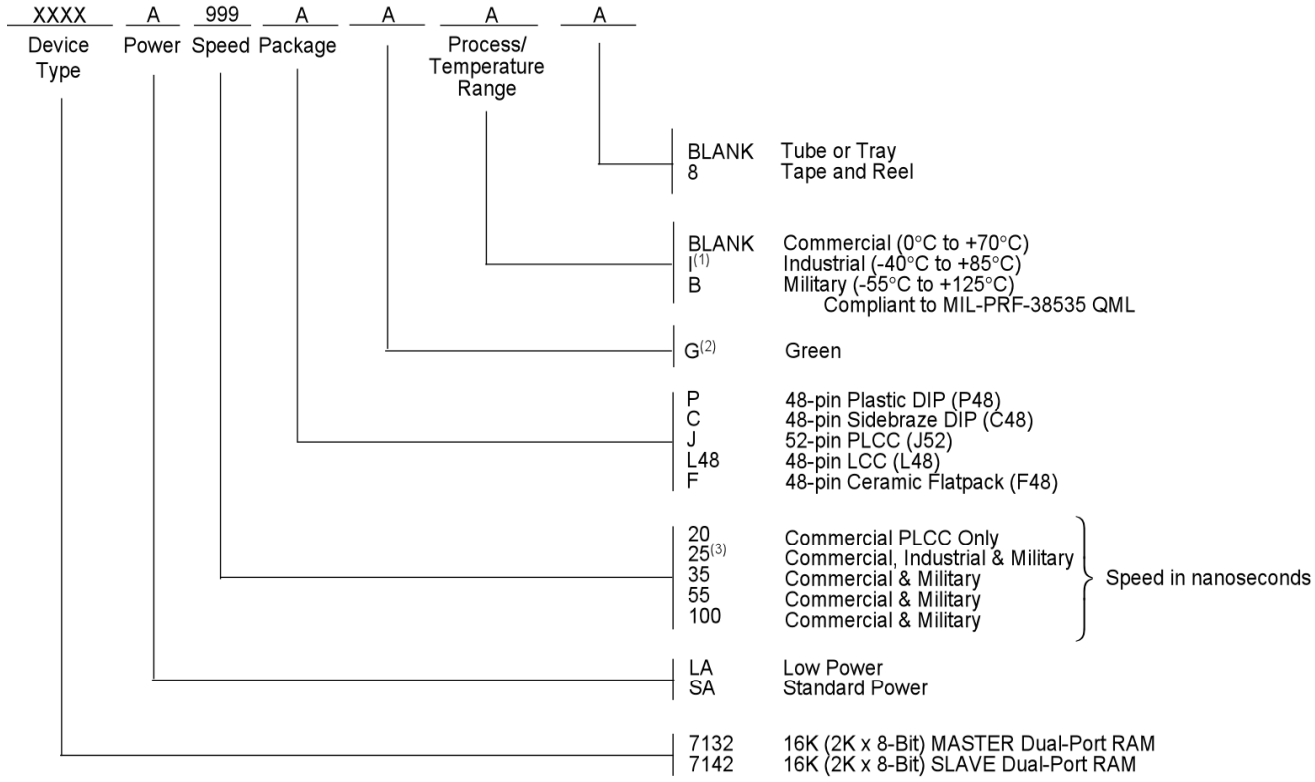

NOTES:

1. Industrial temperature range is available. For specific speeds, packages and powers contact your sales office.
2. Green parts available. For specific speeds, packages and powers contact your local sales office.
3. 25ns speed grade not available in DIP packages.

Datasheet Document History

03/24/99:		Initiated datasheet document history
		Converted to new format
		Cosmetic and typographical corrections
	Pages 2 and 3	Added additional notes to pin configurations
06/08/99:		Changed drawing format
08/26/99:	Page 14	Changed Busy Logic and Width Expansion copy
11/10/99:		Replaced IDT logo
01/12/00:	Pages 1 and 2	Moved full "Description" to page 2 and adjusted page layouts
	Page 1	Added "(LAonly)" to paragraph
	Page 2	Fixed P48-1 body package description
	Page 3	Increased storage temperature parameters
		Clarified T_A parameter
	Page 4	DC Electrical parameters–changed wording from "open" to "disabled"
	Page 6	Added asteriks to Figures 1 and 3 in drw 06
	Page 14	Corrected part numbers
		Changed ±500mV to 0mV in notes
		Datasheet Document History continued on page 16

Datasheet Document History (cont'd)

06/11/04:	Page 6	Corrected errors in Figure 3 by changing 1250Ω to 270Ω and removing "or Int" and Int
	Page 4, 7, 9, 11 & 15	Clarified Industrial temp offering for 25ns
	Page 5	Removed $\overline{INT}$ from V_{OL} parameter in DC Electrical Characteristics table
	Page 6	Updated AC Test Conditions Input Rise/Fall Times from 5ns to 3ns
01/17/06:	Page 1	Added green availability to features
	Page 15	Added green indicator to ordering information
	Page 16	Replaced IDT address with new
10/21/08:	Page 15	Removed "IDT" from orderable part number
09/20/10:	Page 14	Corrected $\overline{BUSY}$ description to indicate open drain outputs
10/03/14:	Page 2	Removed IDT in reference to fabrication
	Page 15	Added Tape and Reel to Ordering Information
	Page 2, 3 & 15	The package codes P48-1, C48-2, J52-1, L48-1 & F48-1 changed to P48, C48, J52, L48 & F48 respectively to match standard package codes
	Page 15	Add annotation (3) to 25ns speed grade to indicate that 25ns is not available in DIP packages
10/08/14:	Page 15	Corrected a typo

CORPORATE HEADQUARTERS
6024 Silver Creek Valley Road
San Jose, CA 95138

for SALES:
800-345-7015 or 408-284-8200
fax: 408-284-2775
www.idt.com

for Tech Support:
408-284-2794
DualPortHelp@idt.com

The IDT logo is a registered trademark of Integrated Device Technology, Inc.