REVISION AQ

DO NOT SCALE FROM THIS PRINT

NOTES:

1. Ⓒ REPRESENTS A CRITICAL DIMENSION FOR STATISTICAL PROCESS CONTROL USE.
2. ALL DIMENSIONS IN BRACKETS [ ] TO BE MILLIMETERS.
3. TUBE POSITIONS −05 THRU −36 ONLY; POSITIONS −02 THRU −04 TO BE LAYER PACKAGED.
4. .020 [.51] MAX CUT FLASH, CUT FLASH TO BE IN A NON−CRITICAL AREA LOCATED BETWEEN BODIES.
5. INSULATOR MATERIAL: BLACK LCP, UL 94 VO.

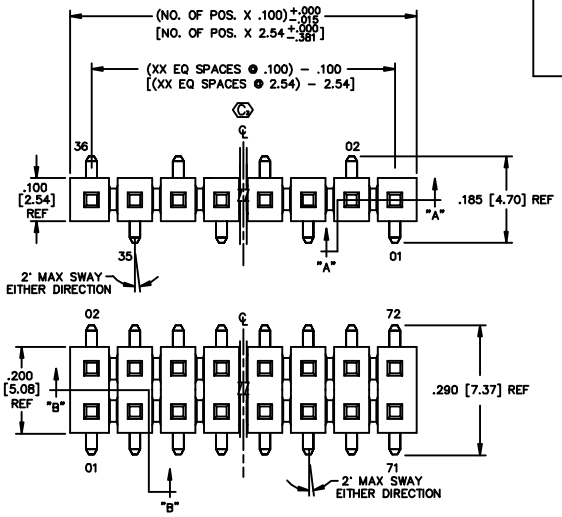

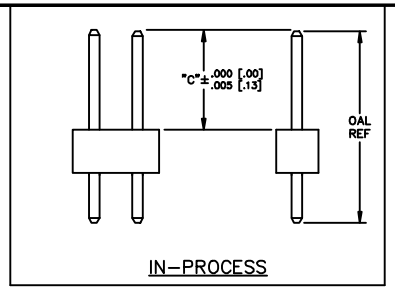

PATENT NUMBERS
5713755 / 5961339

TABLE 1					
LEAD STYLE	TERMINAL	"H" REF	"A" WHEN "B" IS .090 [2.29]	"C"	IN−PROCESS OAL REF
−08	T−1S6−08−XX−2	.465 [11.81]	.375 [9.53]	.315 [8.00]	.530 [13.46]
−09	T−1S6−09−XX−2	.665 [16.89]	.575 [14.61]	.515 [13.08]	.730 [18.54]
−10	T−1S6−10−XX−2	.765 [19.43]	.675 [17.15]	.615 [15.62]	.830 [21.08]
−11	T−1S6−11−XX−2	.865 [21.97]	.775 [19.69]	.715 [18.61]	.930 [23.62]
−12	T−1S6−12−XX−2	.965 [25.11]	.875 [22.23]	.815 [20.70]	1.030 [26.16]
−15	T−1S6−15−XX−2	.565 [14.35]	.475 [12.07]	.415 [10.54]	.630 [16.00]
−16	T−1S6−16−XX−2	.380 [9.65]	.290 [7.37]	.230 [5.84]	.445 [11.30]
−17	T−1S6−17−XX−2	.415 [10.54]	.325 [8.26]	.265 [6.73]	.480 [12.19]
−20	T−1S6−20−XX−2	1.065 [27.05]	.975 [24.77]	.915 [23.24]	1.130 [28.70]

UNLESS OTHERWISE NOTED
DIMENSIONS ARE IN INCHES
TOLERANCES ARE:
ONE PLACE DECIMALS ± .1 [3] THREE PLACE DECIMALS ± .005 [.13]
TWO PLACE DECIMALS ± .01 [.3] FOUR PLACE DECIMALS ± .0020 [.051]
ANGLES ± 2°

TITLE: HW BOARD TO BOARD ASSEMBLY

DWG NO: HW−XX−XX−XX−X−XXXX−SM−X−XXX

SHEET 1 OF 1

HW−XX−XX−XX−X−XXXX−SM−X−XXX

NO. OF POSITIONS −02 THRU −36

LEAD STYLE (SEE TABLE 1)

PLATING SPEC.
−T: MATTE TIN CONTACT AND TAIL
−S: SELECTIVE, 30 Au / 50 Ni MIN ON CONTACT, MATTE TIN TAIL
−G: GOLD, 10 Au / 50 Ni MIN ON CONTACT, 3 Au / 50 Ni MIN ON TAIL
−L: LIGHT SELECTIVE, 10 Au / 50 Ni MIN, MATTE TIN TAIL
−TL: TIN/LEAD (60/10+/−5%) CONTACT AND TAIL
−H: HEAVY GOLD, 30 Au / 50 Ni MIN ON CONTACT, 3 Au / 50 Ni MIN ON TAIL
−P: FLASH SELECTIVE, 3 Au / 50 Ni MIN ON CONTACT, MATTE TIN TAIL
−TM: MATTE TIN CONTACT AND TAIL
−SM: SELECTIVE, 30 Au / 50 Ni MIN ON CONTACT, MATTE TIN TAIL
−LM: LIGHT SELECTIVE, 10 Au / 50 Ni MIN ON CONTACT, MATTE TIN TAIL
−FM: FLASH SELECTIVE, 3 Au / 50 Ni MIN ON CONTACT, MATTE TIN TAIL

ROW OPTION
−D: DOUBLE ROW (USE RTSM−50−DVU FOR BOTTOM INSULATOR) *(USE WRTSM−50−DVU FOR TOP INSULATOR)
−S: SINGLE ROW (USE TSM−XX−S BODY FOR BOTTOM INSULATOR) * (USE WTSM−50−SV FOR TOP INSULATOR)

BOARD SPACE "X" = −XXX (SEE FIG 1 & TABLE 1) MAX= C + .150

SURFACE MOUNT

OPTION #2
POLARIZED POSITION
SPECIFY OMITTED PIN

OPTION #1
−LC: LOCKING CLIP (SEE FIG. 1)
(−D USE RTSM−50−DVU, USE LC−05−TM)
(−S USE TSM−50−SV BODY) (USE LC−08−TM−02)
−A: ALIGNMENT PIN (SEE FIG. 2)
(−S: 3 POSITION USE TSM−03−SV−A, MUST BE MOLDED TO POSITION)
(4−50 POSITIONS USE TSM−XX−SV−XX, 2 POSITIONS TO USE TSM−08−SV−04)
(−D: FOR MOLDED TO POSITION, USE RTSM−50−DVU−XX BODY, AVAILABLE ON POS −02 THRU −36
(−S: FOR STAKED, USE RTSM−50−DVU BODY, 3 POS MIN)
LEAVE BLANK FOR NO HOLD DOWN OPTION
(−D USE RTSM−50−DVU /SEE FIG. 1/ CAN BE CUT TO POSITION)
(−S USE TSM−50−SV /SEE FIG. 1/ CAN BE CUT TO POSITION)
−TR: TAPE & REEL (27 MAX POSITIONS) (MAX HEIGHT: .6875)

PACKAGING VIEW

NOTE: VIEW DRAWN TO SHOW LOCATION OF PLUG IN TUBE.

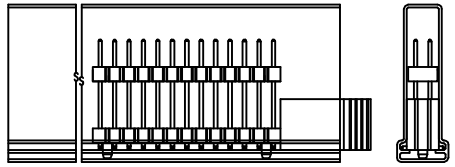

TABLE 2		
ROW OPTION	PACKAGING TUBE (SEE NOTE 3)	PLUG
−S: SINGLE	PT−1−24−01−47	TP−24
−D: DOUBLE	PT−1−24−02−47	TP−03
LEAD STYLE −20 DOUBLE	PT−1−24−04−51	TP−13
LEAD STYLE −20 SINGLE	PT−1−24−08−03	TP−07

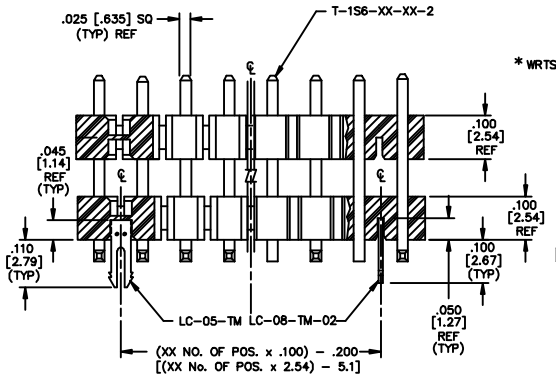

SECTION "B−B"
DOUBLE ROW SHOWN

SECTION "A−A"
SINGLE ROW SHOWN

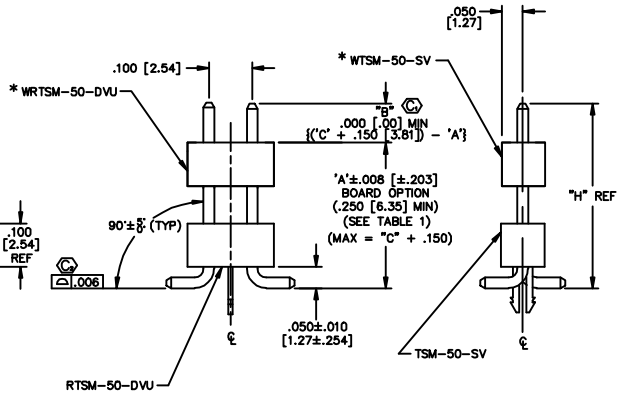

FIG. 1
LOCKING CLIP OPTION SHOWN
CLIPS N/A WITH −A OPTION.

DIFFERENT AS SHOWN. OTHERWISE SAME AS FIG. 1.
(02 POS USE 1 PER STRIP) (03−36 POS USE 2 PER STRIP)

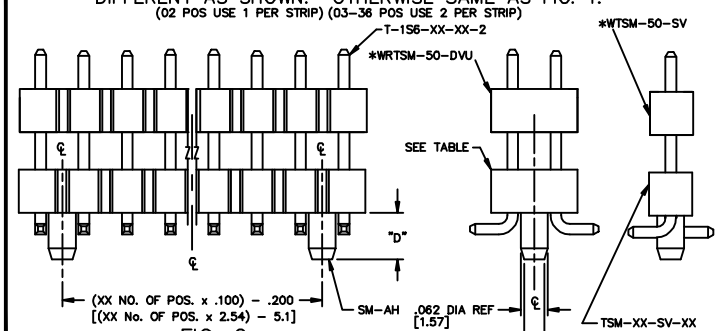

FIG. 2
−A: ALIGNMENT PIN OPTION
ALIGNMENT PINS APPEAR ON −A OPTION ONLY.

TABLE 3		
	"D"	BODY
MOLDED	.100 [2.54] REF	RTSM−50−DVU−XX TSM−XX−SV−XX
STAKED	.100±.005 [2.45±.13]	RTSM−50−DVU

EXISPROD\ASSEMBLY\100 HWASM−SM

samtec
520 PARK EAST BLVD. NEW ALBANY, INDIANA 47150
PHONE (812) 944−6733 P.O. BOX 1147
CODE 55322

MADE BY: GARY PURVIS 3−12−93
CHECKED BY: ECKERT
ENG. APPROVAL: PAE

HW−XX−XX−XX−X−XXXX−SM−X−XXX
SHEET 1 OF 1

PROPRIETARY NOTE
THIS DOCUMENT CONTAINS INFORMATION PROPRIETARY TO SAMTEC, INC. AND TRANSMITTED TO SAMTEC INC. THIS EMAIL MAY NOT BE REPRODUCED OR TRANSFERRED TO OTHER PARTIES IN ANY FORM OR DISCLOSED TO OTHERS OR USED FOR ANY PURPOSE OTHER THAN THAT FOR WHICH IT IS INTENDED, WITHOUT THE EXPRESSED WRITTEN CONSENT OF SAMTEC INC.