10/100BASE-TX DUAL-PORT TRANSFORMER MODULES

Military / Aerospace Grade

Pulse
A TECHNITROL COMPANY

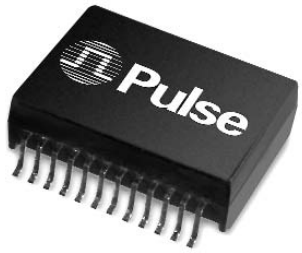

- Compliant with IEEE 802.3u and ANSI X3.263 standards
- 350µH OCL with 8mA bias
- Operating and storage temperature:
  100B-2002: -40°C to +85°C
  100B-2002X: -55°C to +125°C
- IC grade transfer-molded package withstands 235°C peak temperature profile

Electrical Specifications @ 25°C

Part Number	Insertion Loss (dB MIN)	Return Loss (dB MAX)				Crosstalk (dB TYP)				DM to CM Rejection Ratio (dB MAX)		
	0.1-100 MHz	2-30 MHz	40 MHz	50 MHz	60-80 MHz	1 MHz	30 MHz	60 MHz	100 MHz	1-30 MHz	30-60 MHz	60-100 MHz
100B-2002	-1.20	-18	-16	-15	-12	-50	-43	-37	-33	-43	-37	-33
100B-2002X	-1.20	-18	-16	-15	-12	-50	-43	-37	-33	-43	-37	-33

NOTE: Optional Tape & Reel packaging can be ordered by adding a "**T**" suffix to the part number (i.e. 100B-2002 becomes 100B-2002**T**). Pulse complies to industry standard tape and reel specification EIA481.

Mechanical

100B-2002/X

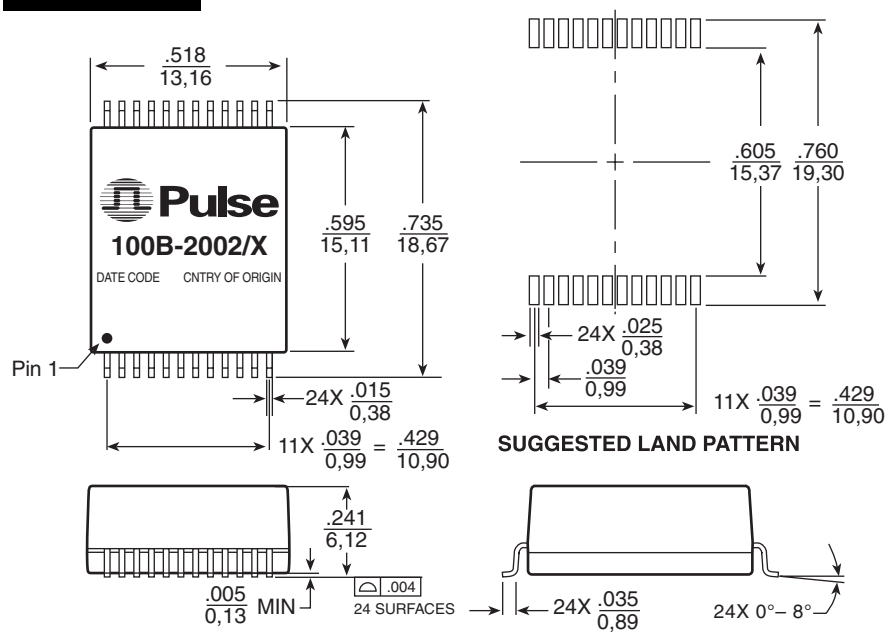

Schematic

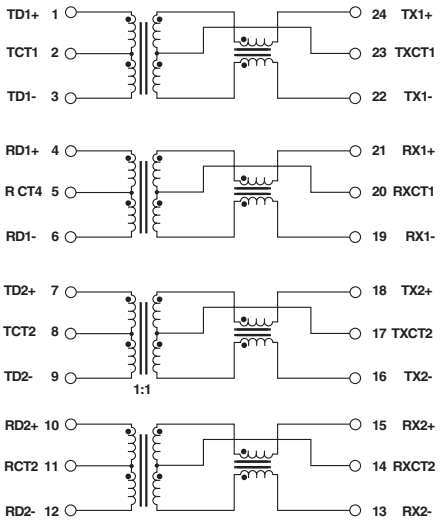

Weight . . . . . .3.0 grams
Tape and Reel 300/reel
Pan Tube 25/tube

Dimensions: Inches / mm

Unless otherwise specified, all tolerances are ± .010 / 0,25

For More Information:

Pulse Worldwide Headquarters
2 Pearl Buck Court
Bristol, PA 19007
U.S.A.
www.pulseeng.com
Tel: 215 781 6400
Fax: 215 781 6403

Pulse Europe
Einsteinstrasse 1
D-71083 Herrenberg
Germany
Tel: 49 7032 7806 0
Fax: 49 7032 7806 12

Pulse China Headquarters
B402, Shenzhen
Tech-Innovation International
Tenth Kejinan Rd.
High-Tech Industrial Park
Nanshan District, Shenzhen
China
Tel: 86 755 33966678
Fax: 86 755 33966700

Pulse North China
Room 1503
XinYin Building
No. 888 YiShan Rd.
Shanghai 200233
China
Tel: 86 21 54643211/2
Fax: 86 21 54643210

Pulse South Asia
150 Kampong Ampat
#07-01/02
KA Centre
Singapore 368324
Tel: 65 6287 8998
Fax: 65 6280 0080

Pulse North Asia
No. 26
Kao Ching Rd.
Yang Mei Chen
Tao Yuan Hsien
Taiwan, R. O. C.
Tel: 886 3 4641811
Fax: 886 3 4641911

Performance warranty of products offered on this data sheet is limited to the parameters specified. Data is subject to change without notice. Other brand and product names mentioned herein may be trademarks or registered trademarks of their respective owners. © Copyright, 2007. Pulse Engineering, Inc. All rights reserved.