RoHs COMPATIBLE PRODUCT NUMBER
54111–XXXXXXXXXLF

PLATING

1 = 0.76µm GOLD ON CONTACT AREA
2µm MIN MATTE TIN ON TAIL
OVER 1.27µm Ni MIN

8 = 0.38µm GOLD ON CONTACT AREA
2µm MIN MATTE TIN ON TAIL
OVER 1.27µm Ni MIN

4 = 2µm MIN MATTE TIN
OVER 1.27µm Ni MIN

INDICATES THE PRODUCT IS RoHS COMPATIBLE SEE NOTE 8

STACK HEIGHT NOTE 6

TOTAL NB OF POSITIONS 02 TO 36

STANDARD PRODUCT NUMBER
54111–XXX–XX–XXXX

PLATING

1 = 0.76µm GOLD ON CONTACT AREA
3.81µm TIN/LEAD ON TAIL
OVER 1.27µm Ni MIN

8 = 0.38µm GOLD ON CONTACT AREA
3.81µm TIN/LEAD ON TAIL
OVER 1.27µm Ni MIN

4 = TIN LEAD
OVER 1.27µm Ni MIN

STACK HEIGHT NOTE 6

TOTAL NB OF POSITIONS 02 TO 36

NOTES:

1. HOUSING MAT'L : HIGH TEMPERATURE THERMOPLASTIC. UL94V–0 COLOR: BLACK
2. PIN MATERIAL : PHOSPHOR BRONZE
3. PRODUCT PACKAGED IN PLASTIC BOX
4. 9N MIN RETENTION IN EITHER DIRECTION
5. TO DETERMINE DIMENSIONS :
   N = NUMBER OF POSITIONS PER ROW
   EXAMPLE : 8 POS PER ROW, N x 2.54 = 20.32mm
6. XXXX = MILLIMETERS
   SPECIFY MILLIMETERS
   8mm MIN TO 25.0mm MAX AVAILABLE
   IN 0.5mm INCREMENT
   EXAMPLE FOR STACK HEIGHT: 1 2 5 0 = 12.5mm
7. MATING LENGTH = (OAL)–(2.41)–(STACK HEIGHT)
8. RoHS COMPATIBLE PRODUCT SPECIFICATIONS
   a – PLATING:
   – "LF" MEANS THE PRODUCT IS LEAD–FREE, 2µm MINIMUM MATTE TIN OVER 1.27µm MINIMUM NICKEL UNDERPLATE.
   b – MANUFACTURING PROCESS COMPATIBILITY
   – THE HOUSING WILL WITHSTAND EXPOSURE TO 260°C ±5°C SOLDER BATH TEMPERATURE FOR 5 SECONDS IN A WAVE SOLDER APPLICATION WITH A 1.6mm MIN THICK CIRCUIT BOARD.
   c – LABELLING:
   – MEETS PACKAGING SPECS AS PER GS–14–920
   d – THIS PRODUCT MEETS EUROPEAN UNION DIRECTIVES AND OTHER COUNTRY REGULATIONS AS DESCRIBED IN GS–22–008

PIN STYLE	OAL
01	12.2
02	13.5
03	15.9
04	16.76
05	17.65
06	18.91
07	20.96
08	23.5
09	26.04
10	28.58
11	31.12
12	33.66
13	34
14	26.42
15	16.56
16	36.2
18	28

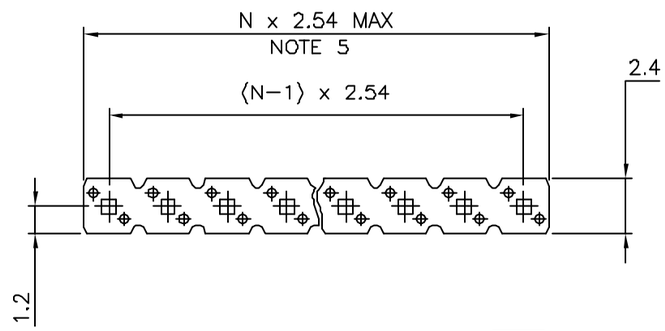

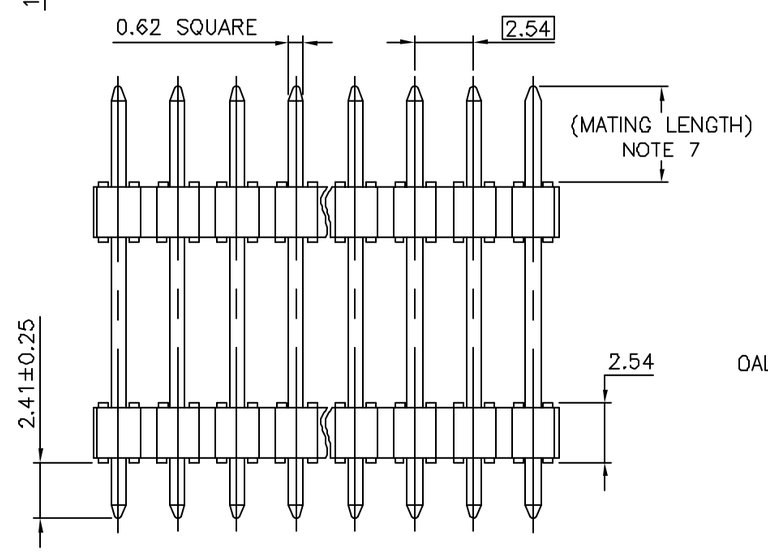

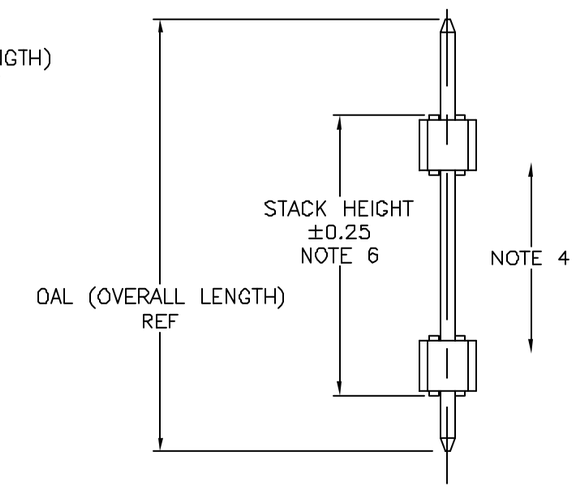

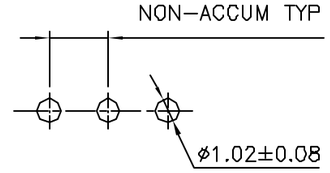

RECOMMENDED HOLE PATTERN

mat'l. code				surface	tolerance	projection	product family
SEE NOTES				ISO 1302 ✓	ISO 406 ISO 1101		BERGSTIK
ltr	ecn no	dr	date	tolerances unless otherwise specified			title
A	F10119	DLE	01.01.24	angles	linear x.x ±0.3	mm	UNSHR.HEADER
B	F10305	JCO	01.05.03		x.xx ±0.13		STR SR TMT
C	F03–0227	DLE	03.06.13		x.xxx ±0.05	scale 4:1	
D	F04–0385	LMU	04.12.16	dr	D.LE	01.01.24	dwg no 54111 — sheet 1 of 1 — size A3
E	F06–0196	LMU	06.06.13	engr	JM.C	01.01.24	
				chr	JM.C	01.01.24	
				appd	JF.N	01.01.24	type CUSTOMER Drawing
sheet index	revision sheet						

form: A3

FCIconnect.com
Copyright FCI

PDM: Rev:E STATUS:Released Printed: Jun 03, 2008