SURFACE MOUNT 10 BASE-T INTERFACE MODULES APPLY TO GENERIC IC

P/N:FB2009D DATA SHEET

Feature

- Available in enhanced or standard design versions.
- Low profile surface mount package.
- Designed for AMD, DEC, LSI, Motorola, and National transceivers.
- Operating temperature range: 0℃ to +70℃.
- Storage temperature range: -25℃ to +125℃.

Electrical Specifications @ 25°C

Part Number	Turns Ratio (±5%)		CUT-OFF Frequency (MHz typ)	Cross talk Attenuation (dB Min)	HI-POT (Vrms)
	TX	RX		1-10MHz	
FB2009D	1CT:1.41	1CT:1	17	-35	1500

Continue

Part Number	Insertion Loss (dB Max)	Return Loss (dB Min) @100Ω Load REF		Attenuation (dB Min) @ 5MHz output REF				CMR (dB Min)
	1-10MHz	5MHz	10MHz	20MHz	25MHz	30MHz	40MHz	30-100MHz
FB2009D	-1.0	-17	-17	-7/-5	-18/-11	-27/-16	-33/-26	-30

Schematic

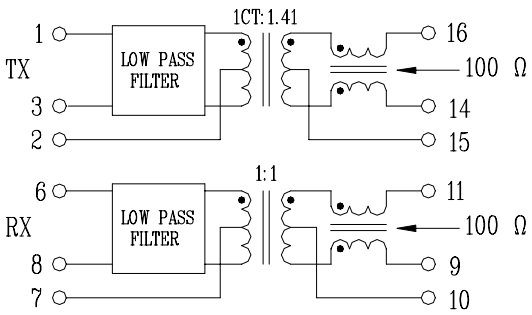

Mechanical

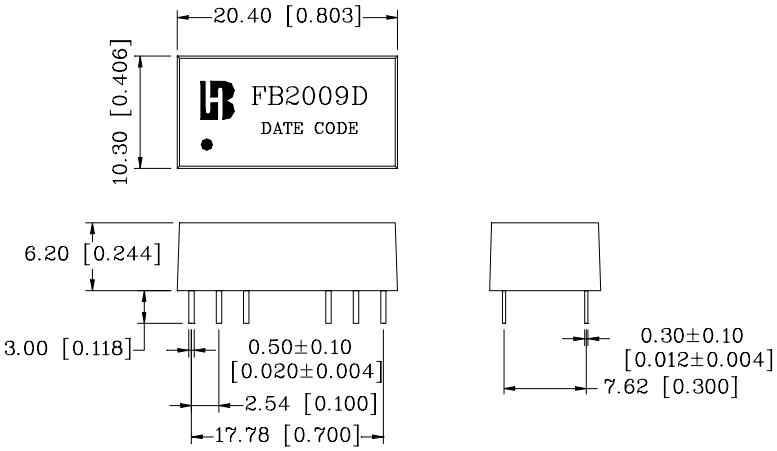

Units: mm[Inches] Tolerances: xx.x0±0.25[0.010]
0.xx±0.05[0.002]

462 Boston St - Topsfield, MA 01983 - Phone: 978-887-8050 - Fax: 978-887-5434