| PART CHARACTERISTICS | |
|---|---|
| NUMBER OF POSITION | ASSEMBLY ITEM NUMBER |
| 02 | 43025-0200 |
| 04 | 43025-0400 |
| 06 | 43025-0600 |
| 08 | 43025-0800 |
| 10 | 43025-1000 |
| 12 | 43025-1200 |
| 14 | 43025-1400 |
| 16 | 43025-1600 |
| 18 | 43025-1800 |
| 20 | 43025-2000 |
| 22 | 43025-2200 |
| 24 | 43025-2400 |

| CKT. NO. | DIM. "A" | DIM. "B" |
|---|---|---|
| 2 | .152/(3.86) | N/A |
| 4 | .270/(6.85) | .118/(3.00) |
| 6 | .388/(9.85) | .236/(6.00) |
| 8 | .506/(12.85) | .354/(9.00) |
| 10 | .624/(15.85) | .472/(12.00) |
| 12 | .742/(18.85) | .591/(15.00) |
| 14 | .860/(21.85) | .709/(18.00) |
| 16 | .978/(24.85) | .827/(21.00) |
| 18 | 1.096/(27.85) | .945/(24.00) |
| 20 | 1.215/(30.85) | 1.063/(27.00) |
| 22 | 1.333/(33.85) | 1.181/(30.00) |
| 24 | 1.451/(36.85) | 1.299/(33.00) |

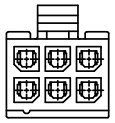

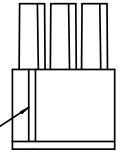

HOUSING SHOWN WITH OPTIONAL FIRST CIRCUIT IDENTIFIER RIB

(SEE NOTE #11)

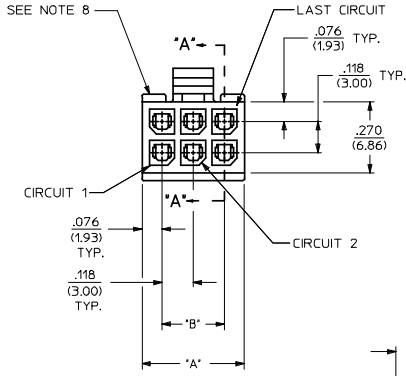


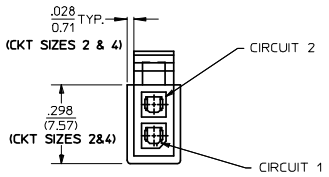


2 CIRCUIT HOUSING

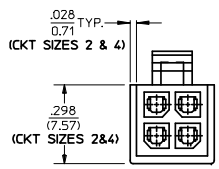


4 CIRCUIT PULL TAB GEOMETRY

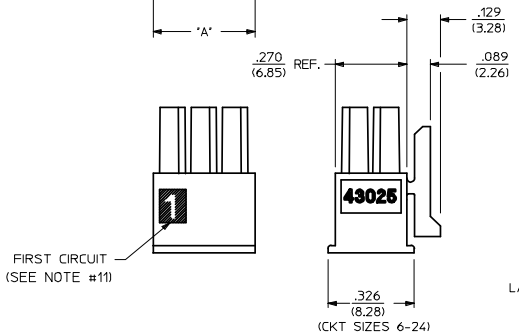


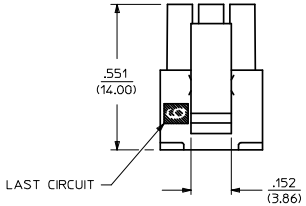


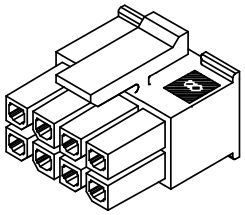

RECEPTACLE
ISO VIEW
(8 CIRCUIT SHOWN)

(SEE NOTE 9 FOR TESTING)

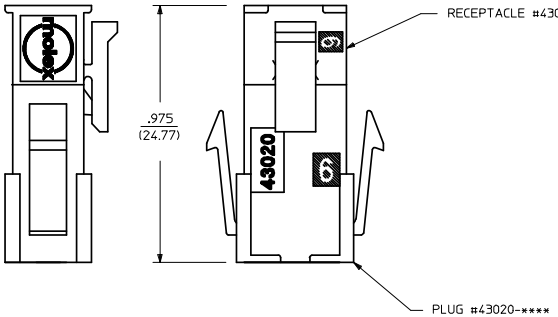


MATED MICRO-FIT CONNECTOR

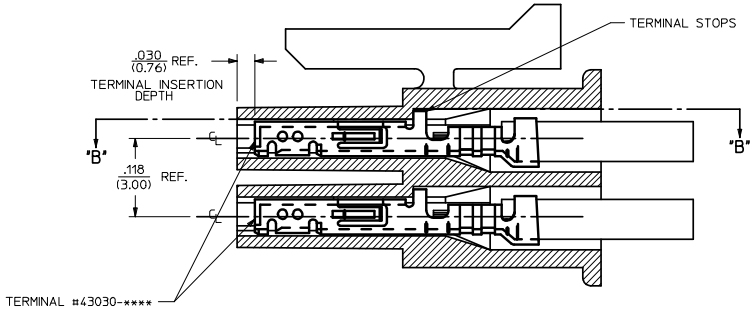


SECTION "A"-"A"
WITH TERMINAL
(SCALE 10:1)

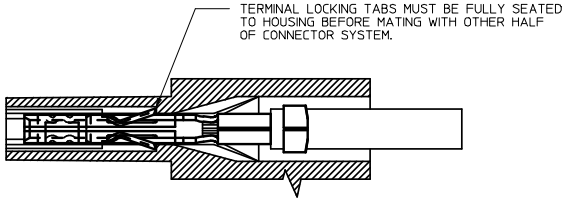


SECTION "B"-"B"
(SCALE 10:1)

NOTES:

1) HOUSING MATERIAL: UNFILLED POLYESTER, RATED U.L. 94V-0, COLOR IS BLACK.
2) THIS RECEPTACLE MATES WITH 43020, 43045.
3) THIS RECEPTACLE IS DESIGNED IN METRIC.
4) THIS RECEPTACLE TO BE USED WITH MOLEX FEMALE TERMINAL #43030-****.
5) SEE SECTION "A"-"A" FOR TERMINAL ORIENTATION IN HOUSING.
6) ALL CONNECTORS MUST MEET THE PERFORMANCE REQUIREMENTS OF MOLEX PRODUCT SPECIFICATION #PS-43045.
7) FOR OVERMOLDING PARAMETERS SEE ENGINEERING SPECIFICATION #SDES-43025-1000.
8) TOP PULL TABS ARE NOT AVAILABLE ON 2 AND 4 CIRCUIT PARTS.
9) MOLEX RECOMMENDS THE USE OF MICRO-FIT TEST PLUG, SERIES NO. 44242-**** WHENEVER TESTING IS PERFORMED. TEST PLUGS MUST NOT BE USED FOR MAKE OR BREAK UNDER LOAD.
10) SOME HOUSINGS MAY HAVE A SMALL GATE BLEMISH NEAR THE GATE THAT DOES NOT AFFECT FUNCTIONALITY.
11) HOUSINGS MAY HAVE EITHER AN IDENTIFIER RIB OR "1" SYMBOL ENGRAVE TO INDICATE CIRCUIT #1.

REVISE, VOID SHT 2
EC NO: UCP2008-1185 2007/12/12
DRWN:MKIPPER 2007/12/14
CHKD:SSOUSEK 2007/12/14
APPR:FSMITH
DESCRIPTION
REV: M

QUALITY SYMBOLS
▼=0
E=0

GENERAL TOLERANCES (UNLESS SPECIFIED)

| | mm | INCH |
|---|---|---|
| 4 PLACES | ± | ± |
| 3 PLACES | ±--- | ±.010 |
| 2 PLACES | ±0.25 | ±.014 |
| 1 PLACE | ±0.35 | ±--- |
| ANGULAR ±1/2° | | |

DRAFT WHERE APPLICABLE MUST REMAIN WITHIN DIMENSIONS

DIMENSION STYLE: IN/MM
SCALE: 4:1
DESIGN UNITS: METRIC
THIRD ANGLE PROJECTION

DRAWN BY: A F G. DATE: 1993/01/14
CHECKED BY: B A P. DATE: 1993/01/14
APPROVED BY: R A S DATE: 1993/01/14
MATERIAL NO.: SEE CHART

TITLE: MICRO-FIT (3.0) 2 THRU 24 CIRCUIT RECEPTACLE

MOLEX INCORPORATED

DOCUMENT NO.: SDA-43025-****
SHEET NO.: 1 OF 1
SIZE: D

THIS DRAWING CONTAINS INFORMATION THAT IS PROPRIETARY TO MOLEX INCORPORATED AND SHOULD NOT BE USED WITHOUT WRITTEN PERMISSION