TEA1792ATS

GreenChip synchronous rectifier controller

Rev. 1 — 10 August 2012 Objective data sheet

1. General description

The TEA1792ATS is a member of the new generation of Synchronous Rectifier (SR) controller ICs for switched mode power supplies. Its high level of integration allows the design of a cost-effective power supply with a very low number of external components.

The TEA1792ATS is a controller IC dedicated to synchronous rectification on the secondary side of discontinuous conduction mode and quasi-resonant flyback converters.

The TEA1792ATS is fabricated in a Silicon-On-Insulator (SOI) process.

2. Features and benefits

2.1 Distinctive features

- Accurate synchronous rectification functionality
- Wide supply voltage range (8.5 V to 38 V)
- High level of integration, resulting in a very low external component count
- High driver output voltage of 10 V to drive all MOSFET brands to the lowest R_{DSon}
- Selectable regulation level for driver stage

2.2 Green features

- Low current consumption
- High system efficiency from no load to full load

2.3 Protection features

- UnderVoltage Protection (UVP)

3. Applications

- The TEA1792ATS is intended for adapters. The device can also be used in all other discontinuous conduction mode systems and quasi-resonant flyback systems that demand a highly efficient and cost-effective solution.

4. Ordering information

Table 1. Ordering information

Type number	Package		
	Name	Description	Version
TEA1792ATS/N1	TSOP6	plastic surface-mounted package; 6 leads	SOT457

5. Block diagram

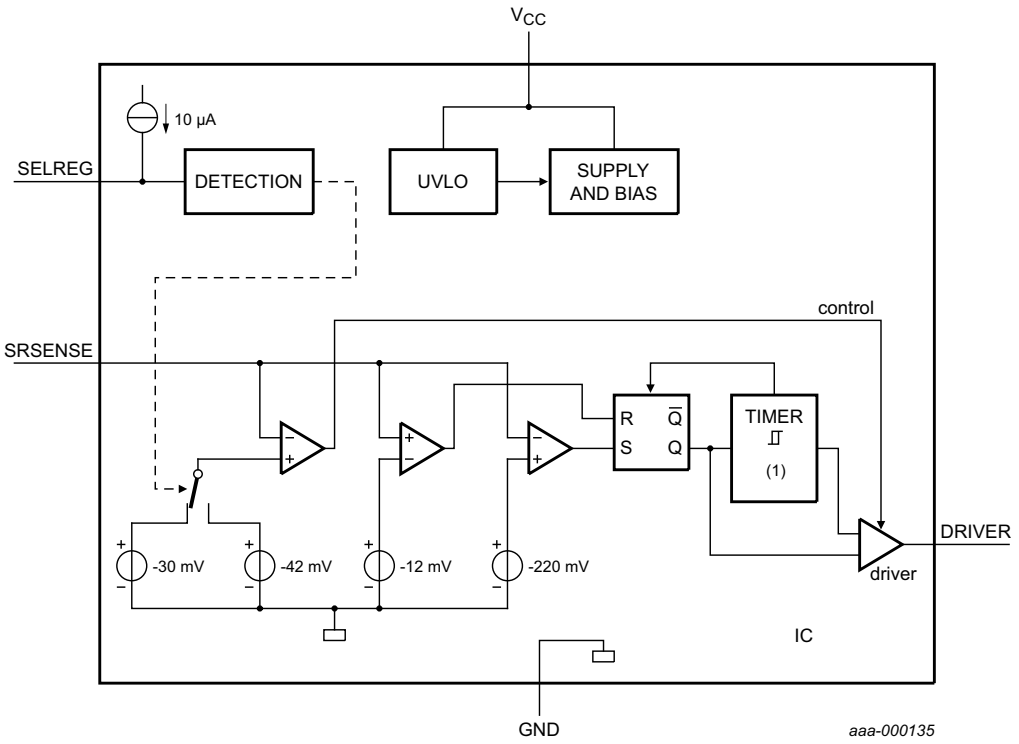

See Table 2 for details on the pinning.

(1) 0.8 μs and 0.95 μs.

Fig 1. TEA1792ATS block diagram

All information provided in this document is subject to legal disclaimers.

© NXP B.V. 2012. All rights reserved.

6. Pinning information

6.1 Pinning

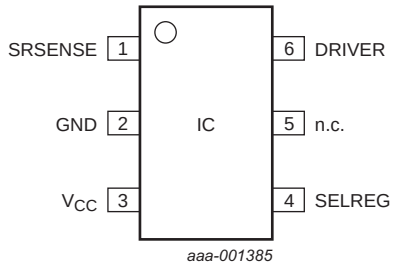

Fig 2. TEA1792ATS pin configuration (TSOP6)

6.2 Pin description

Table 2. Pin description

Symbol	Pin	Description
SRSENSE	1	synchronous timing input
GND	2	ground
V_{CC}	3	supply voltage
SELREG	4	selection input for driver regulation level
n.c	5	not connected
DRIVER	6	driver output for SR MOSFET

All information provided in this document is subject to legal disclaimers.

© NXP B.V. 2012. All rights reserved.

7. Functional description

7.1 Introduction

The TEA1792ATS is the controller for synchronous rectification used in discontinuous conduction mode and quasi-resonant flyback converters.

7.2 Start-up and UnderVoltage LockOut (UVLO)

The IC leaves the undervoltage lockout state and activates the synchronous rectifier circuitry when the voltage on the V_{CC} pin is above 8.5 V (typical). When the voltage drops below 8.0 V (typical), the undervoltage lockout state is entered again and the SR driver output is actively kept low.

7.3 Synchronous rectification

After a negative voltage lower than $V_{act(drv)}$ (–220 mV typical) is sensed on the SRSENSE pin, the driver output voltage is driven HIGH. Then the external MOSFET is switched on. As soon as the SRSENSE voltage rises to $V_{reg(drv)}$ (–42 mV/–30 mV) the driver output voltage is regulated to maintain the $V_{reg(drv)}$ on the SRSENSE pin. When the SRSENSE voltage is above the $V_{deact(drv)}$ level (–12 mV typical), the driver output is pulled to ground.

After switch-on of the SR MOSFET, the input signal on the SRSENSE pin is blanked during the $t_{act(sr)(min)}$ (0.8 μs typical). This action eliminates false switch-off due to high frequency ringing at the start of the secondary stroke.

When the voltage on the SRSENSE pin is $V_{reg(drv)}$, the driver output voltage is reduced. This reduction enables the external power switch to be switched off quickly when the current through the switch reaches zero. The zero current switch-off removes the need for a separate Standby mode to maintain high efficiency during the no-load operation. The zero current is detected by sensing a $V_{deact(drv)}$ (–12 mV typical) level on the SRSENSE pin (see Figure 3).

All information provided in this document is subject to legal disclaimers.

© NXP B.V. 2012. All rights reserved.

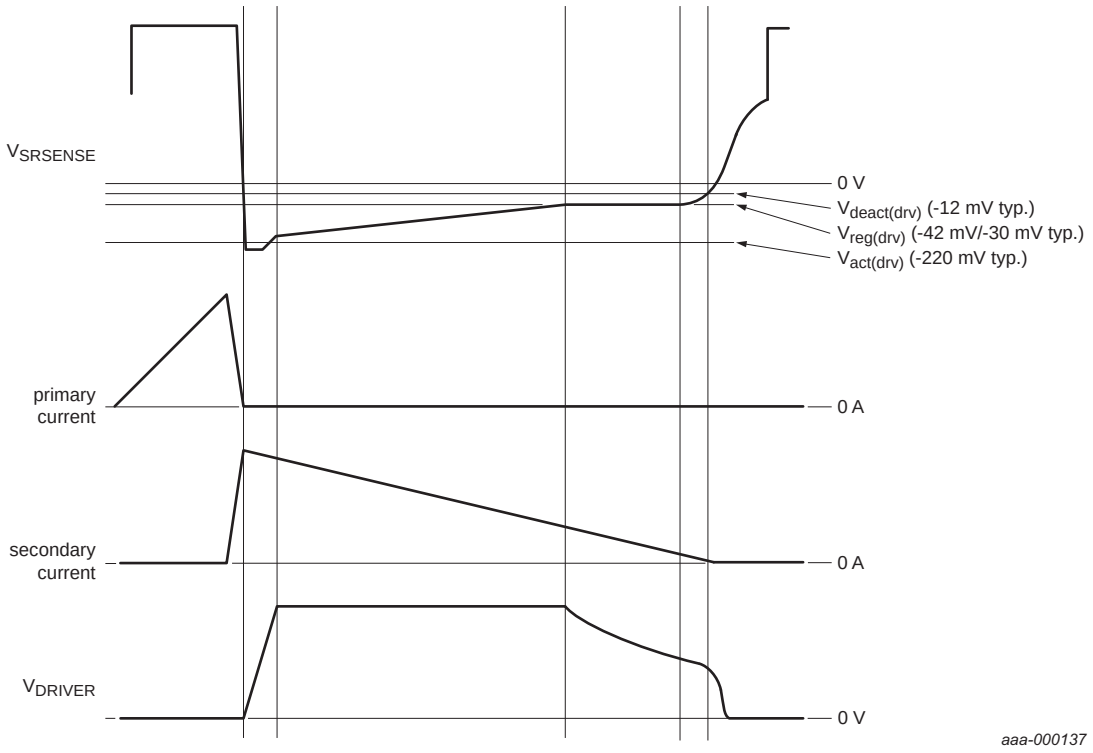

Fig 3. Synchronous rectification signals

The level of the driver regulation voltage $V_{reg(drv)}$ can be selected using the SELREG pin. When this SELREG pin is grounded, the typical $V_{reg(drv)}$ equals –42 mV. When the SELREG pin is left open, the $V_{reg(drv)}$ level equals –30 mV.

Internally, the SELREG pin has a pull-up current source of 10 μA. When this pin is short circuited to ground, the pin selects the lowest $V_{reg(drv)}$. If the pin is left open, the highest $V_{reg(drv)}$ value is selected.

If the secondary stroke of the flyback converter is shorter than $t_{act(sr)(min)}$ short time (0.8 μs typical), the driver output is disabled. This action guarantees stable operation for very low duty cycles. When the secondary stroke increases above $t_{act(sr)(min)}$, long time (0.95 μs typical), the driver output is again enabled.

7.4 Supply management

All internal reference voltages are derived from a temperature compensated, on-chip band gap circuit.

7.5 Driver

The driver circuit to the external power MOSFET gate has a typical source capability of 400 mA and a typical sink capability of 2.7 A. These capabilities permit fast switch-on and switch-off of the power MOSFET for efficient operation. The source stage is coupled to the timer (see Figure 1). When the timer has finished, the source capability is reduced to a small current (5 mA typical) capable of keeping the driver output voltage at its level.

All information provided in this document is subject to legal disclaimers.

© NXP B.V. 2012. All rights reserved.

The output voltage of the driver is limited to 10 V (typical). This high output voltage drives all MOSFET brands to the minimum on-state resistance.

During start-up conditions ($V_{CC} < V_{startup}$) and undervoltage lockout the driver output voltage is actively pulled low.

8. Limiting values

Table 3. Limiting values

In accordance with the Absolute Maximum Rating System (IEC 60134). All voltages are measured with respect to ground (pin 2); positive currents flow into the chip. The voltage ratings and current ratings are valid provided the other ratings are not violated.

Symbol	Parameter	Conditions		Min	Max	Unit
Voltages						
V_{CC}	supply voltage	continuous		–0.4	+38	V
$V_{SRSENSE}$	voltage on pin SRSENSE	continuous		-	120	V
V_{SELREG}	voltage on pin SELREG	continuous		–0.4	5	V
Currents						
I_{DRIVER}	current on pin DRIVER	duty cycle < 10 %		–0.8	+3	A
$I_{SRSENSE}$	current on pin SRSENSE			–3	-	mA
General						
P_{tot}	total power dissipation	T_{amb} < 80 °C		-	0.27	W
T_{stg}	storage temperature			–55	+150	°C
T_j	junction temperature			–40	+150	°C
V_{ESD}	electrostatic discharge voltage	human body model; JEDEC Class 2; all pins	[1]	–2	+2	kV
		charged device model; JEDEC Class 3; all pins		–500	+500	V

[1] Equivalent to discharging a 100 pF capacitor through a 1.5 kΩ series resistor.

9. Thermal characteristics

Table 4. Thermal characteristics

Symbol	Parameter	Conditions	Typ	Unit
$R_{th(j-a)}$	thermal resistance from junction to ambient	JEDEC test board	259	K/W
$R_{th(j-c)}$	thermal resistance from junction to case	JEDEC test board	152	K/W

All information provided in this document is subject to legal disclaimers.

© NXP B.V. 2012. All rights reserved.

10. Characteristics

Table 5. Characteristics

T_{amb} = 25 °C; V_{CC} = 20 V; all voltages are measured with respect to ground (pin 2); currents are positive when flowing into the IC; unless otherwise specified.

Symbol	Parameter	Conditions		Min	Typ	Max	Unit
Supply voltage management (pin V_{CC})							
$V_{startup}$	start-up voltage			8.2	8.5	8.8	V
V_{hys}	hysteresis voltage		[1]	0.35	0.5	0.65	V
$I_{CC(oper)}$	operating supply current	V_{CC} = 8 V (V_{CC} < $V_{startup}$)		0.2	0.25	0.4	mA
		under normal operation; no load on pin DRIVER		0.8	1	1.2	mA
Synchronous rectification sense input (pin SRSENSE)							
$V_{act(drv)}$	driver activation voltage			–260	–220	–180	mV
$V_{reg(drv)}$	driver regulation voltage	resistance between pins SELREG and GND < 15 kΩ		–55	–42	–30	mV
		resistance between pins SELREG and GND > 700 kΩ		–38	–30	–22	mV
$V_{deact(drv)}$	driver deactivation voltage			-	–12	-	mV
$t_{d(act)(drv)}$	driver activation delay time			50	75	100	ns
$t_{act(sr)(min)}$	minimum synchronous rectification active time	short time		0.6	0.8	1	μs
		long time		0.7	0.95	1.2	μs
$I_{o(SELREG)}$	output current on pin SELREG	V_{SELREG} = 2.5 V		–12	–10	–8	μA
Driver (pin DRIVER)							
I_{source}	source current	V_{CC} = 15 V; voltage on pin DRIVER = 2 V					
		during minimum synchronous rectification time		–0.45	–0.4	–0.35	A
		minimum synchronous rectification time has ended		–6	–5	–4	mA
I_{sink}	sink current	V_{CC} = 15 V					
		voltage on pin DRIVER = 2 V		1	1.4	-	A
		voltage on pin DRIVER = 9.5 V		2.2	2.7	-	A
$V_{o(max)}$	maximum output voltage	V_{CC} = 15 V		9	10	12	V

[1] The V_{CC} stop voltage is $V_{startup} - V_{hys}$.

All information provided in this document is subject to legal disclaimers.

© NXP B.V. 2012. All rights reserved.

11. Application information

A switched mode power supply with the TEA1792ATS consists of a primary side discontinuous conduction mode flyback controller, a transformer and an output stage with a feedback circuit. A MOSFET (Q_{sec}) is used for low conduction losses in the output state. The TEA1792ATS controls this MOSFET.

The timing for the synchronous rectifier switch is derived from the voltage sensed on the SRSENSE pin. The resistor in the SRSENSE connection protects the TEA1792ATS from excessive voltages. The $R_{SRSENSE}$ resistor is typically 1 kΩ. Higher values can impair correct timing, lower values do not provide sufficient protection.

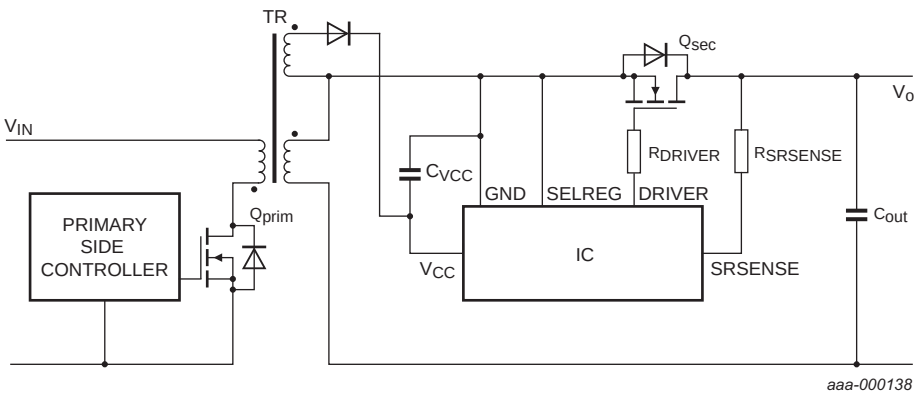

Fig 4. Application diagram high side rectification

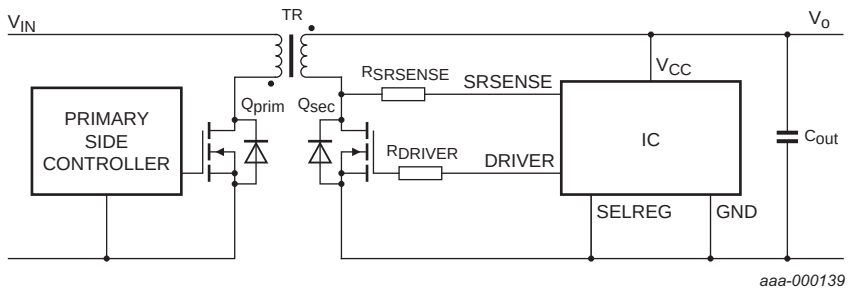

Fig 5. Application diagram low side rectification

All information provided in this document is subject to legal disclaimers.

© NXP B.V. 2012. All rights reserved.

12. Package outline

Plastic surface-mounted package (TSOP6); 6 leads **SOT457**

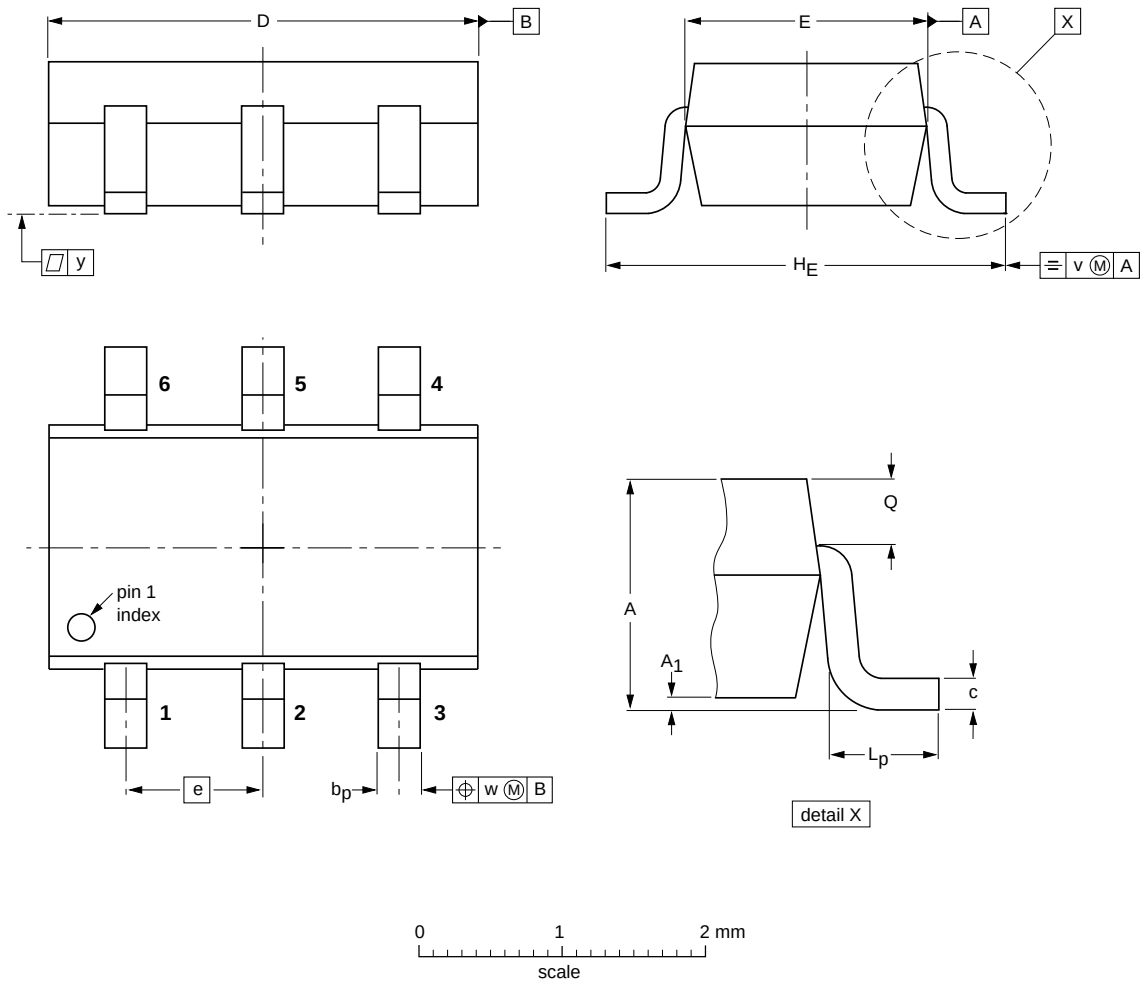

DIMENSIONS (mm are the original dimensions)

UNIT	A	A_1	b_p	c	D	E	e	H_E	L_p	Q	v	w	y
mm	1.1 0.9	0.1 0.013	0.40 0.25	0.26 0.10	3.1 2.7	1.7 1.3	0.95	3.0 2.5	0.6 0.2	0.33 0.23	0.2	0.2	0.1

OUTLINE VERSION	REFERENCES				EUROPEAN PROJECTION	ISSUE DATE
	IEC	JEDEC	JEITA			
SOT457			SC-74			~~05-11-07~~ 06-03-16

Fig 6. Package outline SOT457 (TSOP6)

All information provided in this document is subject to legal disclaimers.

© NXP B.V. 2012. All rights reserved.

13. Revision history

Table 6. Revision history

Document ID	Release date	Data sheet status	Change notice	Supersedes
TEA1792ATS v.1	20120810	Objective data sheet	-	-

All information provided in this document is subject to legal disclaimers.

© NXP B.V. 2012. All rights reserved.

14. Legal information

14.1 Data sheet status

Document status[1][2]	Product status[3]	Definition
Objective [short] data sheet	Development	This document contains data from the objective specification for product development.
Preliminary [short] data sheet	Qualification	This document contains data from the preliminary specification.
Product [short] data sheet	Production	This document contains the product specification.

[1] Please consult the most recently issued document before initiating or completing a design.

[2] The term 'short data sheet' is explained in section "Definitions".

[3] The product status of device(s) described in this document may have changed since this document was published and may differ in case of multiple devices. The latest product status information is available on the Internet at URL http://www.nxp.com.

14.2 Definitions

Draft — The document is a draft version only. The content is still under internal review and subject to formal approval, which may result in modifications or additions. NXP Semiconductors does not give any representations or warranties as to the accuracy or completeness of information included herein and shall have no liability for the consequences of use of such information.

Short data sheet — A short data sheet is an extract from a full data sheet with the same product type number(s) and title. A short data sheet is intended for quick reference only and should not be relied upon to contain detailed and full information. For detailed and full information see the relevant full data sheet, which is available on request via the local NXP Semiconductors sales office. In case of any inconsistency or conflict with the short data sheet, the full data sheet shall prevail.

Product specification — The information and data provided in a Product data sheet shall define the specification of the product as agreed between NXP Semiconductors and its customer, unless NXP Semiconductors and customer have explicitly agreed otherwise in writing. In no event however, shall an agreement be valid in which the NXP Semiconductors product is deemed to offer functions and qualities beyond those described in the Product data sheet.

14.3 Disclaimers

Limited warranty and liability — Information in this document is believed to be accurate and reliable. However, NXP Semiconductors does not give any representations or warranties, expressed or implied, as to the accuracy or completeness of such information and shall have no liability for the consequences of use of such information. NXP Semiconductors takes no responsibility for the content in this document if provided by an information source outside of NXP Semiconductors.

In no event shall NXP Semiconductors be liable for any indirect, incidental, punitive, special or consequential damages (including - without limitation - lost profits, lost savings, business interruption, costs related to the removal or replacement of any products or rework charges) whether or not such damages are based on tort (including negligence), warranty, breach of contract or any other legal theory.

Notwithstanding any damages that customer might incur for any reason whatsoever, NXP Semiconductors' aggregate and cumulative liability towards customer for the products described herein shall be limited in accordance with the *Terms and conditions of commercial sale* of NXP Semiconductors.

Right to make changes — NXP Semiconductors reserves the right to make changes to information published in this document, including without limitation specifications and product descriptions, at any time and without notice. This document supersedes and replaces all information supplied prior to the publication hereof.

Suitability for use — NXP Semiconductors products are not designed, authorized or warranted to be suitable for use in life support, life-critical or safety-critical systems or equipment, nor in applications where failure or malfunction of an NXP Semiconductors product can reasonably be expected to result in personal injury, death or severe property or environmental damage. NXP Semiconductors and its suppliers accept no liability for inclusion and/or use of NXP Semiconductors products in such equipment or applications and therefore such inclusion and/or use is at the customer's own risk.

Applications — Applications that are described herein for any of these products are for illustrative purposes only. NXP Semiconductors makes no representation or warranty that such applications will be suitable for the specified use without further testing or modification.

Customers are responsible for the design and operation of their applications and products using NXP Semiconductors products, and NXP Semiconductors accepts no liability for any assistance with applications or customer product design. It is customer's sole responsibility to determine whether the NXP Semiconductors product is suitable and fit for the customer's applications and products planned, as well as for the planned application and use of customer's third party customer(s). Customers should provide appropriate design and operating safeguards to minimize the risks associated with their applications and products.

NXP Semiconductors does not accept any liability related to any default, damage, costs or problem which is based on any weakness or default in the customer's applications or products, or the application or use by customer's third party customer(s). Customer is responsible for doing all necessary testing for the customer's applications and products using NXP Semiconductors products in order to avoid a default of the applications and the products or of the application or use by customer's third party customer(s). NXP does not accept any liability in this respect.

Limiting values — Stress above one or more limiting values (as defined in the Absolute Maximum Ratings System of IEC 60134) will cause permanent damage to the device. Limiting values are stress ratings only and (proper) operation of the device at these or any other conditions above those given in the Recommended operating conditions section (if present) or the Characteristics sections of this document is not warranted. Constant or repeated exposure to limiting values will permanently and irreversibly affect the quality and reliability of the device.

Terms and conditions of commercial sale — NXP Semiconductors products are sold subject to the general terms and conditions of commercial sale, as published at http://www.nxp.com/profile/terms, unless otherwise agreed in a valid written individual agreement. In case an individual agreement is concluded only the terms and conditions of the respective agreement shall apply. NXP Semiconductors hereby expressly objects to applying the customer's general terms and conditions with regard to the purchase of NXP Semiconductors products by customer.

No offer to sell or license — Nothing in this document may be interpreted or construed as an offer to sell products that is open for acceptance or the grant, conveyance or implication of any license under any copyrights, patents or other industrial or intellectual property rights.

All information provided in this document is subject to legal disclaimers.

© NXP B.V. 2012. All rights reserved.

Export control — This document as well as the item(s) described herein may be subject to export control regulations. Export might require a prior authorization from competent authorities.

Non-automotive qualified products — Unless this data sheet expressly states that this specific NXP Semiconductors product is automotive qualified, the product is not suitable for automotive use. It is neither qualified nor tested in accordance with automotive testing or application requirements. NXP Semiconductors accepts no liability for inclusion and/or use of non-automotive qualified products in automotive equipment or applications.

In the event that customer uses the product for design-in and use in automotive applications to automotive specifications and standards, customer (a) shall use the product without NXP Semiconductors' warranty of the product for such automotive applications, use and specifications, and (b) whenever customer uses the product for automotive applications beyond NXP Semiconductors' specifications such use shall be solely at customer's own risk, and (c) customer fully indemnifies NXP Semiconductors for any liability, damages or failed product claims resulting from customer design and use of the product for automotive applications beyond NXP Semiconductors' standard warranty and NXP Semiconductors' product specifications.

14.4 Trademarks

Notice: All referenced brands, product names, service names and trademarks are the property of their respective owners.

GreenChip — is a trademark of NXP B.V.

15. Contact information

For more information, please visit: **http://www.nxp.com**

For sales office addresses, please send an email to: **salesaddresses@nxp.com**

All information provided in this document is subject to legal disclaimers.

© NXP B.V. 2012. All rights reserved.

16. Contents

1 General description 1
2 Features and benefits 1
2.1 Distinctive features 1
2.2 Green features 1
2.3 Protection features 1
3 Applications 1
4 Ordering information 2
5 Block diagram 2
6 Pinning information 3
6.1 Pinning 3
6.2 Pin description 3
7 Functional description 4
7.1 Introduction 4
7.2 Start-up and UnderVoltage LockOut (UVLO) . . 4
7.3 Synchronous rectification 4
7.4 Supply management 5
7.5 Driver 5
8 Limiting values 6
9 Thermal characteristics 6
10 Characteristics 7
11 Application information 8
12 Package outline 9
13 Revision history 10
14 Legal information 11
14.1 Data sheet status 11
14.2 Definitions 11
14.3 Disclaimers 11
14.4 Trademarks 12
15 Contact information 12
16 Contents 13

Please be aware that important notices concerning this document and the product(s) described herein, have been included in section 'Legal information'.

© NXP B.V. 2012. All rights reserved.

For more information, please visit: http://www.nxp.com
For sales office addresses, please send an email to: salesaddresses@nxp.com

Date of release: 10 August 2012
Document identifier: TEA1792ATS