ispLSI® and pLSI® 1032E

High-Density Programmable Logic

Features

- **HIGH DENSITY PROGRAMMABLE LOGIC**
  - **6000 PLD Gates**
  - **64 I/O Pins, Eight Dedicated Inputs**
  - **192 Registers**
  - **High Speed Global Interconnect**
  - **Wide Input Gating for Fast Counters, State Machines, Address Decoders, etc.**
  - **Small Logic Block Size for Random Logic**
- **HIGH PERFORMANCE E²CMOS® TECHNOLOGY**
  - **f_{max} = 125 MHz Maximum Operating Frequency**
  - **t_{pd} = 7.5 ns Propagation Delay**
  - **TTL Compatible Inputs and Outputs**
  - **Electrically Erasable and Reprogrammable**
  - **Non-Volatile**
  - **100% Tested at Time of Manufacture**
  - **Unused Product Term Shutdown Saves Power**
- **ispLSI OFFERS THE FOLLOWING ADDED FEATURES**
  - **In-System Programmable (ISP™) 5-Volt Only**
  - **Increased Manufacturing Yields, Reduced Time-to-Market and Improved Product Quality**
  - **Reprogram Soldered Devices for Faster Prototyping**
- **OFFERS THE EASE OF USE AND FAST SYSTEM SPEED OF PLDs WITH THE DENSITY AND FLEXIBILITY OF FIELD PROGRAMMABLE GATE ARRAYS**
  - **Complete Programmable Device Can Combine Glue Logic and Structured Designs**
  - **Enhanced Pin Locking Capability**
  - **Four Dedicated Clock Input Pins**
  - **Synchronous and Asynchronous Clocks**
  - **Programmable Output Slew Rate Control to Minimize Switching Noise**
  - **Flexible Pin Placement**
  - **Optimized Global Routing Pool Provides Global Interconnectivity**
- **ispEXPERT™ – LOGIC COMPILER AND COMPLETE ISP DEVICE DESIGN SYSTEMS FROM HDL SYNTHESIS THROUGH IN-SYSTEM PROGRAMMING**
  - **Superior Quality of Results**
  - **Tightly Integrated with Leading CAE Vendor Tools**
  - **Productivity Enhancing Timing Analyzer, Explore Tools, Timing Simulator and ispANALYZER™**
  - **PC and UNIX Platforms**

Functional Block Diagram

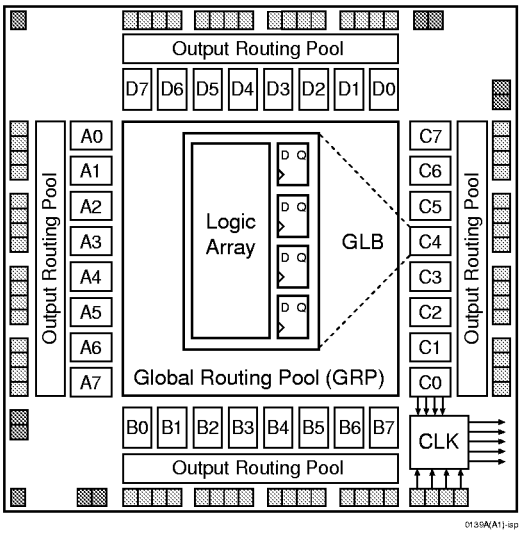

Description

The ispLSI and pLSI 1032E are High Density Programmable Logic Devices containing 192 Registers, 64 Universal I/O pins, eight Dedicated Input pins, four Dedicated Clock Input pins and a Global Routing Pool (GRP). The GRP provides complete interconnectivity between all of these elements. The ispLSI 1032E features 5-Volt in-system programmability and in-system diagnostic capabilities. The ispLSI 1032E device offers non-volatile reprogrammability of the logic, as well as the interconnects to provide truly reconfigurable systems. It is architecturally and parametrically compatible to the pLSI 1032E device, but multiplexes four input pins to control in-system programming. A functional superset of the ispLSI and pLSI 1032 architecture, the ispLSI and pLSI 1032E devices add two new global output enable pins.

The basic unit of logic on the ispLSI and pLSI 1032E devices is the Generic Logic Block (GLB). The GLBs are labeled A0, A1…D7 (see Figure 1). There are a total of 32 GLBs in the ispLSI and pLSI 1032E devices. Each GLB has 18 inputs, a programmable AND/OR/Exclusive OR array, and four outputs which can be configured to be either combinatorial or registered. Inputs to the GLB come from the GRP and dedicated inputs. All of the GLB outputs are brought back into the GRP so that they can be connected to the inputs of any GLB on the device.

Copyright © 1998 Lattice Semiconductor Corp. All brand or product names are trademarks or registered trademarks of their respective holders. The specifications and information herein are subject to change without notice.

LATTICE SEMICONDUCTOR CORP., 5555 Northeast Moore Ct., Hillsboro, Oregon 97124, U.S.A.
Tel. (503) 681-0118; 1-800-LATTICE; FAX (503) 681-3037; http://www.latticesemi.com

October 1998

Functional Block Diagram

Figure 1. ispLSI and pLSI 1032E Functional Block Diagram

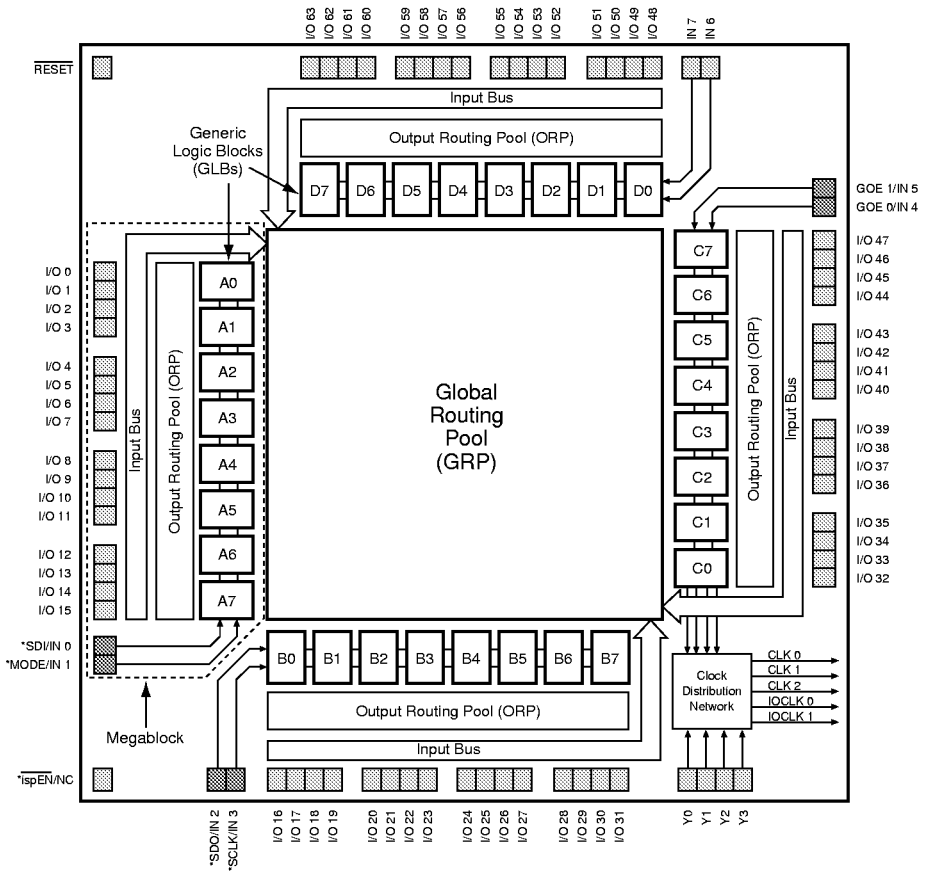

*ISP Control Functions for ispLSI 1032E Only

The devices also have 64 I/O cells, each of which is directly connected to an I/O pin. Each I/O cell can be individually programmed to be a combinatorial input, registered input, latched input, output or bi-directional I/O pin with 3-state control. The signal levels are TTL compatible voltages and the output drivers can source 4 mA or sink 8 mA. Each output can be programmed independently for fast or slow output slew rate to minimize overall output switching noise.

Eight GLBs, 16 I/O cells, two dedicated inputs and one ORP are connected together to make a Megablock (see figure 1). The outputs of the eight GLBs are connected to a set of 16 universal I/O cells by the ORP. Each ispLSI and pLSI 1032E device contains four Megablocks.

The GRP has, as its inputs, the outputs from all of the GLBs and all of the inputs from the bi-directional I/O cells. All of these signals are made available to the inputs of the GLBs. Delays through the GRP have been equalized to minimize timing skew.

Clocks in the ispLSI and pLSI 1032E devices are selected using the Clock Distribution Network. Four dedicated clock pins (Y0, Y1, Y2 and Y3) are brought into the distribution network, and five clock outputs (CLK 0, CLK 1, CLK 2, IOCLK 0 and IOCLK 1) are provided to route clocks to the GLBs and I/O cells. The Clock Distribution Network can also be driven from a special clock GLB (C0 on the ispLSI and pLSI 1032E devices). The logic of this GLB allows the user to create an internal clock from a combination of internal signals within the device.

Absolute Maximum Ratings [1]

Supply Voltage V_{cc} ..... -0.5 to +7.0V

Input Voltage Applied..... -2.5 to V_{CC} +1.0V

Off-State Output Voltage Applied ..... -2.5 to V_{CC} +1.0V

Storage Temperature..... -65 to 150°C

Case Temp. with Power Applied ..... -55 to 125°C

Max. Junction Temp. (T_J) with Power Applied ... 150°C

1. Stresses above those listed under the "Absolute Maximum Ratings" may cause permanent damage to the device. Functional operation of the device at these or at any other conditions above those indicated in the operational sections of this specification is not implied (while programming, follow the programming specifications).

DC Recommended Operating Conditions

SYMBOL	PARAMETER			MIN.	MAX.	UNITS
V_{CC}	Supply Voltage	Commercial	T_A = 0°C to + 70°C	4.75	5.25	V
		Industrial	T_A = -40°C to + 85°C	4.5	5.5	V
V_{IL}	Input Low Voltage			0	0.8	V
V_{IH}	Input High Voltage			2.0	V_{cc}+1	V

Table 2-0005/1032E

Capacitance (T_A=25°C, f=1.0 MHz)

SYMBOL	PARAMETER	TYPICAL	UNITS	TEST CONDITIONS
C_1	Dedicated Input, I/O, Y1, Y2, Y3, Clock Capacitance (Commercial/Industrial)	8	pf	V_{CC} = 5.0V, V_{PIN} = 2.0V
C_2	Y0 Clock Capacitance	15	pf	V_{CC} = 5.0V, V_{PIN} = 2.0V

Table 2-0006/1032E

Data Retention Specifications

PARAMETER	MINIMUM	MAXIMUM	UNITS
Data Retention	20	–	Years
ispLSI Erase/Reprogram Cycles	10000	–	Cycles
pLSI Erase/Reprogram Cycles	100	–	Cycles

Table 2-0008/1032E

Switching Test Conditions

Input Pulse Levels	GND to 3.0V	
Input Rise and Fall Time 10% to 90%	-125	≤ 2 ns
	Others	≤ 3 ns
Input Timing Reference Levels	1.5V	
Output Timing Reference Levels	1.5V	
Output Load	See Figure 2	

Table 2-0003/1032E

3-state levels are measured 0.5V from steady-state active level.

Output Load Conditions (see Figure 2)

TEST CONDITION		R1	R2	CL
A		470Ω	390Ω	35pF
B	Active High	∞	390Ω	35pF
	Active Low	470Ω	390Ω	35pF
C	Active High to Z at V_{OH} -0.5V	∞	390Ω	5pF
	Active Low to Z at V_{OL} +0.5V	470Ω	390Ω	5pF

Table 2-0004/1032E

Figure 2. Test Load

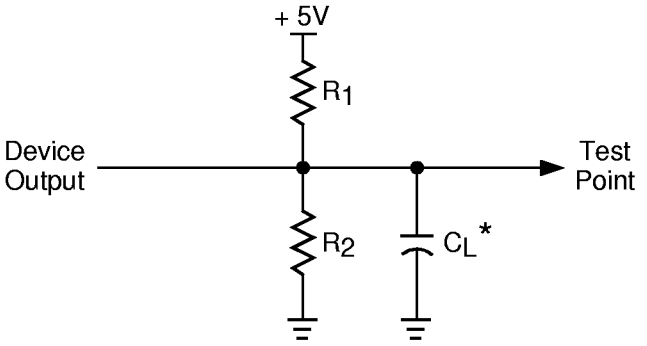

*C_L includes Test Fixture and Probe Capacitance.

0213a

DC Electrical Characteristics

Over Recommended Operating Conditions

SYMBOL	PARAMETER	CONDITION		MIN.	TYP.[3]	MAX.	UNITS
V_{OL}	Output Low Voltage	I_{OL} = 8 mA		–	–	0.4	V
V_{OH}	Output High Voltage	I_{OH} = -4 mA		2.4	–	–	V
I_{IL}	Input or I/O Low Leakage Current	0V ≤ V_{IN} ≤ V_{IL} (Max.)		–	–	-10	µA
I_{IH}	Input or I/O High Leakage Current	3.5V ≤ V_{IN} ≤ V_{CC}		–	–	10	µA
I_{IL-isp}	$\overline{ispEN}$ Input Low Leakage Current	0V ≤ V_{IN} ≤ V_{IL}		–	–	-150	µA
I_{IL-PU}	I/O Active Pull-Up Current	0V ≤ V_{IN} ≤ V_{IL}		–	–	-150	µA
I_{OS}[1]	Output Short Circuit Current	V_{CC} = 5V, V_{OUT} = 0.5V		–	–	-200	mA
I_{CC}[2, 4]	Operating Power Supply Current	V_{IL} = 0.5V, V_{IH} = 3.0V	Commercial	–	190	–	mA
		f_{CLOCK} = 1 MHz	Industrial	–	190	–	mA

Table 2-0007/1032E

1. One output at a time for a maximum duration of one second. V_{OUT} = 0.5V was selected to avoid test problems by tester ground degradation. Characterized but not 100% tested.
2. Measured using eight 16-bit counters.
3. Typical values are at V_{CC} = 5V and T_A = 25°C.
4. Maximum I_{CC} varies widely with specific device configuration and operating frequency. Refer to the Power Consumption section of this data sheet and Thermal Management section of the Lattice Semiconductor Data Book or CD-ROM to estimate maximum I_{CC}.

External Timing Parameters

Over Recommended Operating Conditions

PARAMETER	TEST COND.[4]	#[2]	DESCRIPTION[1]	-125		-100		UNITS
				MIN.	MAX.	MIN.	MAX.	
t_{pd1}	A	1	Data Propagation Delay, 4PT Bypass, ORP Bypass	–	7.5	–	10.0	ns
t_{pd2}	A	2	Data Propagation Delay, Worst Case Path	–	10.0	–	12.5	ns
f_{max} (Int.)	A	3	Clock Frequency with Internal Feedback[3]	125	–	100	–	MHz
f_{max} (Ext.)	–	4	Clock Frequency with External Feedback $\left(\frac{1}{t_{su2} + t_{co1}}\right)$	91.0	–	71.0	–	MHz
f_{max} (Tog.)	–	5	Clock Frequency, Max. Toggle $\left(\frac{1}{t_{wh} + t_{wl}}\right)$	167	–	125	–	MHz
t_{su1}	–	6	GLB Reg. Setup Time before Clock,4 PT Bypass	5.0	–	7.0	–	ns
t_{co1}	A	7	GLB Reg. Clock to Output Delay, ORP Bypass	–	5.0	–	6.0	ns
t_{h1}	–	8	GLB Reg. Hold Time after Clock, 4 PT Bypass	0.0	–	0.0	–	ns
t_{su2}	–	9	GLB Reg. Setup Time before Clock	6.0	–	8.0	–	ns
t_{co2}	–	10	GLB Reg. Clock to Output Delay	–	6.0	–	7.0	ns
t_{h2}	–	11	GLB Reg. Hold Time after Clock	0.0	–	0.0	–	ns
t_{r1}	A	12	Ext. Reset Pin to Output Delay	–	10.0	–	13.5	ns
t_{rw1}	–	13	Ext. Reset Pulse Duration	5.0	–	6.5	–	ns
t_{ptoeen}	B	14	Input to Output Enable	–	12.0	–	15.0	ns
$t_{ptoedis}$	C	15	Input to Output Disable	–	12.0	–	15.0	ns
t_{goeen}	B	16	Global OE Output Enable	–	7.0	–	9.0	ns
t_{goedis}	C	17	Global OE Output Disable	–	7.0	–	9.0	ns
t_{wh}	–	18	External Synchronous Clock Pulse Duration, High	3.0	–	4.0	–	ns
t_{wl}	–	19	External Synchronous Clock Pulse Duration, Low	3.0	–	4.0	–	ns
t_{su3}	–	20	I/O Reg. Setup Time before Ext. Sync Clock (Y2, Y3)	3.0	–	3.5	–	ns
t_{h3}	–	21	I/O Reg. Hold Time after Ext. Sync. Clock (Y2, Y3)	0.0	–	0.0	–	ns

Table 2-0030A/1032E

1. Unless noted otherwise, all parameters use the GRP, 20 PTXOR path, ORP and Y0 clock.
2. Refer to Timing Model in this data sheet for further details.
3. Standard 16-bit counter using GRP feedback.
4. Reference Switching Test Conditions section.

External Timing Parameters

Over Recommended Operating Conditions

PARAMETER	TEST COND.[4]	#[2]	DESCRIPTION[1]	-90		-80		-70		UNITS
				MIN.	MAX.	MIN.	MAX.	MIN.	MAX.	
t_{pd1}	A	1	Data Propagation Delay, 4PT Bypass, ORP Bypass	–	10.0	–	12.0	–	15.0	ns
t_{pd2}	A	2	Data Propagation Delay, Worst Case Path	–	12.5	–	15.0	–	17.5	ns
f_{max} (Int.)	A	3	Clock Frequency with Internal Feedback[3]	90.0	–	80.0	–	70.0	–	MHz
f_{max} (Ext.)	–	4	Clock Frequency with External Feedback $\left(\frac{1}{tsu2 + tco1}\right)$	69.0	–	61.0	–	56.0	–	MHz
f_{max} (Tog.)	–	5	Clock Frequency, Max. Toggle $\left(\frac{1}{twh + twl}\right)$	125	–	111	–	100	–	MHz
t_{su1}	–	6	GLB Reg. Setup Time before Clock,4 PT Bypass	7.5	–	8.5	–	9.0	–	ns
t_{co1}	A	7	GLB Reg. Clock to Output Delay, ORP Bypass	–	6.0	–	6.5	–	7.0	ns
t_{h1}	–	8	GLB Reg. Hold Time after Clock, 4 PT Bypass	0.0	–	0.0	–	0.0	–	ns
t_{su2}	–	9	GLB Reg. Setup Time before Clock	8.5	–	10.0	–	11.0	–	ns
t_{co2}	–	10	GLB Reg. Clock to Output Delay	–	7.0	–	7.5	–	8.0	ns
t_{h2}	–	11	GLB Reg. Hold Time after Clock	0.0	–	0.0	–	0.0	–	ns
t_{r1}	A	12	Ext. Reset Pin to Output Delay	–	13.5	–	14.0	–	15.0	ns
t_{rw1}	–	13	Ext. Reset Pulse Duration	6.5	–	8.0	–	10.0	–	ns
t_{ptoeen}	B	14	Input to Output Enable	–	15.0	–	16.5	–	18.0	ns
$t_{ptoedis}$	C	15	Input to Output Disable	–	15.0	–	16.5	–	18.0	ns
t_{goeen}	B	16	Global OE Output Enable	–	9.0	–	10.0	–	12.0	ns
t_{goedis}	C	17	Global OE Output Disable	–	9.0	–	10.0	–	12.0	ns
t_{wh}	–	18	External Synchronous Clock Pulse Duration, High	4.0	–	4.5	–	5.0	–	ns
t_{wl}	–	19	External Synchronous Clock Pulse Duration, Low	4.0	–	4.5	–	5.0	–	ns
t_{su3}	–	20	I/O Reg. Setup Time before Ext. Sync Clock (Y2, Y3)	3.5	–	3.5	–	4.0	–	ns
t_{h3}	–	21	I/O Reg. Hold Time after Ext. Sync. Clock (Y2, Y3)	0.0	–	0.0	–	0.0	–	ns

Table 2-0030B/1032E

1. Unless noted otherwise, all parameters use the GRP, 20 PTXOR path, ORP and Y0 clock.
2. Refer to Timing Model in this data sheet for further details.
3. Standard 16-bit counter using GRP feedback.
4. Reference Switching Test Conditions section.

Obsolete Data Sheet

Internal Timing Parameters[1]

PARAM.	# [2]	DESCRIPTION	-125		-100		UNITS
			MIN.	MAX.	MIN.	MAX.	
Inputs							
t_{iobp}	22	I/O Register Bypass	–	0.3	–	0.3	ns
t_{iolat}	23	I/O Latch Delay	–	1.9	–	2.3	ns
t_{iosu}	24	I/O Register Setup Time before Clock	3.0	–	3.5	–	ns
t_{ioh}	25	I/O Register Hold Time after Clock	0.0	–	0.0	–	ns
t_{ioco}	26	I/O Register Clock to Out Delay	–	4.6	–	5.0	ns
t_{ior}	27	I/O Register Reset to Out Delay	–	4.6	–	5.0	ns
t_{din}	28	Dedicated Input Delay	–	2.3	–	2.7	ns
GRP							
t_{grp1}	29	GRP Delay, 1 GLB Load	–	1.8	–	1.9	ns
t_{grp4}	30	GRP Delay, 4 GLB Loads	–	2.0	–	2.4	ns
t_{grp8}	31	GRP Delay, 8 GLB Loads	–	2.3	–	2.4	ns
t_{grp16}	32	GRP Delay, 16 GLB Loads	–	2.8	–	3.0	ns
t_{grp32}	33	GRP Delay, 32 GLB Loads	–	3.8	–	4.2	ns
GLB							
t_{4ptbpc}	34	4 Prod.Term Bypass Path Delay (Combinatorial)	–	3.9	–	5.3	ns
t_{4ptbpr}	35	4 Prod. Term Bypass Path Delay (Registered)	–	4.0	–	5.3	ns
t_{1ptxor}	36	1 Prod.Term/XOR Path Delay	–	3.6	–	4.6	ns
$t_{20ptxor}$	37	20 Prod. Term/XOR Path Delay	–	5.0	–	5.8	ns
t_{xoradj}	38	XOR Adjacent Path Delay [3]	–	5.0	–	6.3	ns
t_{gbp}	39	GLB Register Bypass Delay	–	0.4	–	1.0	ns
t_{gsu}	40	GLB Register Setup Time before Clock	0.1	–	0.5	–	ns
t_{gh}	41	GLB Register Hold Time after Clock	4.5	–	5.8	–	ns
t_{gco}	42	GLB Register Clock to Output Delay	–	2.3	–	2.5	ns
t_{gro}	43	GLB Register Reset to Output Delay	–	4.9	–	6.2	ns
t_{ptre}	44	GLB Prod.Term Reset to Register Delay	–	3.9	–	4.5	ns
t_{ptoe}	45	GLB Prod. Term Output Enable to I/O Cell Delay	–	5.4	–	7.2	ns
t_{ptck}	46	GLB Prod. Term Clock Delay	2.9	4.0	3.5	4.7	ns
ORP							
t_{orp}	47	ORP Delay	–	1.0	–	1.0	ns
t_{orpbp}	48	ORP Bypass Delay	–	0.0	–	0.0	ns

Table 2-0036A/1032E

1. Internal Timing Parameters are not tested and are for reference only.
2. Refer to Timing Model in this data sheet for further details.
3. The XOR adjacent path can only be used by hard macros.

Internal Timing Parameters[1]

PARAM.	# [2]	DESCRIPTION	-90		-80		-70		UNITS
			MIN.	MAX.	MIN.	MAX.	MIN.	MAX.	
Inputs									
t_{iobp}	22	I/O Register Bypass	–	0.3	–	0.3	–	0.3	ns
t_{iolat}	23	I/O Latch Delay	–	2.3	–	2.7	–	3.3	ns
t_{iosu}	24	I/O Register Setup Time before Clock	3.5	–	3.5	–	4.0	–	ns
t_{ioh}	25	I/O Register Hold Time after Clock	0.0	–	0.0	–	0.0	–	ns
t_{ioco}	26	I/O Register Clock to Out Delay	–	5.0	–	5.4	–	6.1	ns
t_{ior}	27	I/O Register Reset to Out Delay	–	5.0	–	5.4	–	6.0	ns
t_{din}	28	Dedicated Input Delay	–	2.6	–	2.8	–	2.8	ns
GRP									
t_{grp1}	29	GRP Delay, 1 GLB Load	–	2.1	–	2.2	–	2.5	ns
t_{grp4}	30	GRP Delay, 4 GLB Loads	–	2.3	–	2.5	–	2.5	ns
t_{grp8}	31	GRP Delay, 8 GLB Loads	–	2.6	–	2.8	–	3.2	ns
t_{grp16}	32	GRP Delay, 16 GLB Loads	–	3.2	–	3.5	–	4.0	ns
t_{grp32}	33	GRP Delay, 32 GLB Loads	–	4.4	–	4.8	–	5.6	ns
GLB									
t_{4ptbpc}	34	4 Prod.Term Bypass Path Delay (Combinatorial)	–	5.7	–	7.1	–	8.8	ns
t_{4ptbpr}	35	4 Prod. Term Bypass Path Delay (Registered)	–	6.1	–	6.7	–	7.2	ns
t_{1ptxor}	36	1 Prod.Term/XOR Path Delay	–	5.6	–	6.6	–	8.3	ns
$t_{20ptxor}$	37	20 Prod. Term/XOR Path Delay	–	6.8	–	7.8	–	8.7	ns
t_{xoradj}	38	XOR Adjacent Path Delay [3]	–	7.1	–	8.2	–	9.2	ns
t_{gbp}	39	GLB Register Bypass Delay	–	0.4	–	1.3	–	1.6	ns
t_{gsu}	40	GLB Register Setup Time before Clock	0.2	–	0.5	–	0.5	–	ns
t_{gh}	41	GLB Register Hold Time after Clock	6.8	–	7.9	–	8.8	–	ns
t_{gco}	42	GLB Register Clock to Output Delay	–	2.9	–	2.9	–	2.9	ns
t_{gro}	43	GLB Register Reset to Output Delay	–	6.3	–	6.4	–	6.8	ns
t_{ptre}	44	GLB Prod.Term Reset to Register Delay	–	5.1	–	5.5	–	5.8	ns
t_{ptoe}	45	GLB Prod. Term Output Enable to I/O Cell Delay	–	7.1	–	8.0	–	9.0	ns
t_{ptck}	46	GLB Prod. Term Clock Delay	4.1	5.3	4.5	5.8	4.8	6.2	ns
ORP									
t_{orp}	47	ORP Delay	–	1.0	–	1.0	–	1.0	ns
t_{orpbp}	48	ORP Bypass Delay	–	0.0	–	0.0	–	0.0	ns

Table 2-0036B/1032E

1. Internal Timing Parameters are not tested and are for reference only.
2. Refer to Timing Model in this data sheet for further details.
3. The XOR adjacent path can only be used by hard macros.

Specifications for obsolete

Internal Timing Parameters[1]

PARAM.	#	DESCRIPTION	-125		-100		UNITS
			MIN.	MAX.	MIN.	MAX.	
Outputs							
t_{ob}	49	Output Buffer Delay	–	1.3	–	2.0	ns
t_{sl}	50	Output Buffer Delay, Slew Limited Adder	–	9.9	–	10.0	ns
t_{oen}	51	I/O Cell OE to Output Enabled	–	4.3	–	5.1	ns
t_{odis}	52	I/O Cell OE to Output Disabled	–	4.3	–	5.1	ns
t_{goe}	53	Global OE	–	2.7	–	3.9	ns
Clocks							
t_{gy0}	54	Clk Delay, Y0 to Global GLB Clk Line (Ref. clk)	1.4	1.4	1.5	1.5	ns
$t_{gy1/2}$	55	Clk Delay, Y1 or Y2 to Global GLB Clk Line	1.4	1.4	1.5	1.5	ns
t_{gcp}	56	Clk Delay, Clock GLB to Global GLB Clk Line	0.8	1.8	0.8	1.8	ns
$t_{ioy2/3}$	57	Clk Delay, Y2 or Y3 to I/O Cell Global Clk Line	0.0	0.0	0.0	0.0	ns
t_{iocp}	58	Clk Delay, Clk GLB to I/O Cell Global Clk Line	0.8	1.8	0.8	1.8	ns
Global Reset							
t_{gr}	59	Global Reset to GLB and I/O Registers	–	2.8	–	4.3	ns

1. Internal Timing Parameters are not tested and are for reference only.

Table 2-0037A/1032E

Internal Timing Parameters[1]

PARAM.	#	DESCRIPTION	-90		-80		-70		UNITS
			MIN.	MAX.	MIN.	MAX.	MIN.	MAX.	
Outputs									
t_{ob}	49	Output Buffer Delay	–	1.7	–	2.1	–	2.6	ns
t_{sl}	50	Output Buffer Delay, Slew Limited Adder	–	10.0	–	10.0	–	10.0	ns
t_{oen}	51	I/O Cell OE to Output Enabled	–	5.3	–	5.7	–	6.2	ns
t_{odis}	52	I/O Cell OE to Output Disabled	–	5.3	–	5.7	–	6.2	ns
t_{goe}	53	Global OE	–	3.7	–	4.3	–	5.8	ns
Clocks									
t_{gy0}	54	Clock Delay, Y0 to Global GLB Clock Line (Ref. clock)	1.4	1.4	1.5	1.5	1.5	1.5	ns
$t_{gy1/2}$	55	Clock Delay, Y1 or Y2 to Global GLB Clock Line	2.4	2.9	2.6	3.1	1.5	1.5	ns
t_{gcp}	56	Clock Delay, Clock GLB to Global GLB Clock Line	0.8	1.8	0.8	1.8	0.8	1.8	ns
$t_{ioy2/3}$	57	Clock Delay, Y2 or Y3 to I/O Cell Global Clock Line	0.0	0.0	0.0	0.0	0.0	0.0	ns
t_{iocp}	58	Clock Delay, Clock GLB to I/O Cell Global Clock Line	0.8	1.8	0.8	1.8	0.8	1.8	ns
Global Reset									
t_{gr}	59	Global Reset to GLB and I/O Registers	–	4.5	–	4.5	–	4.6	ns

1. Internal Timing Parameters are not tested and are for reference only.

Table 2-0037B/1032E

USE 1032E-100 FOR NEW DESIGNS

ispLSI and pLSI 1032E Timing Model

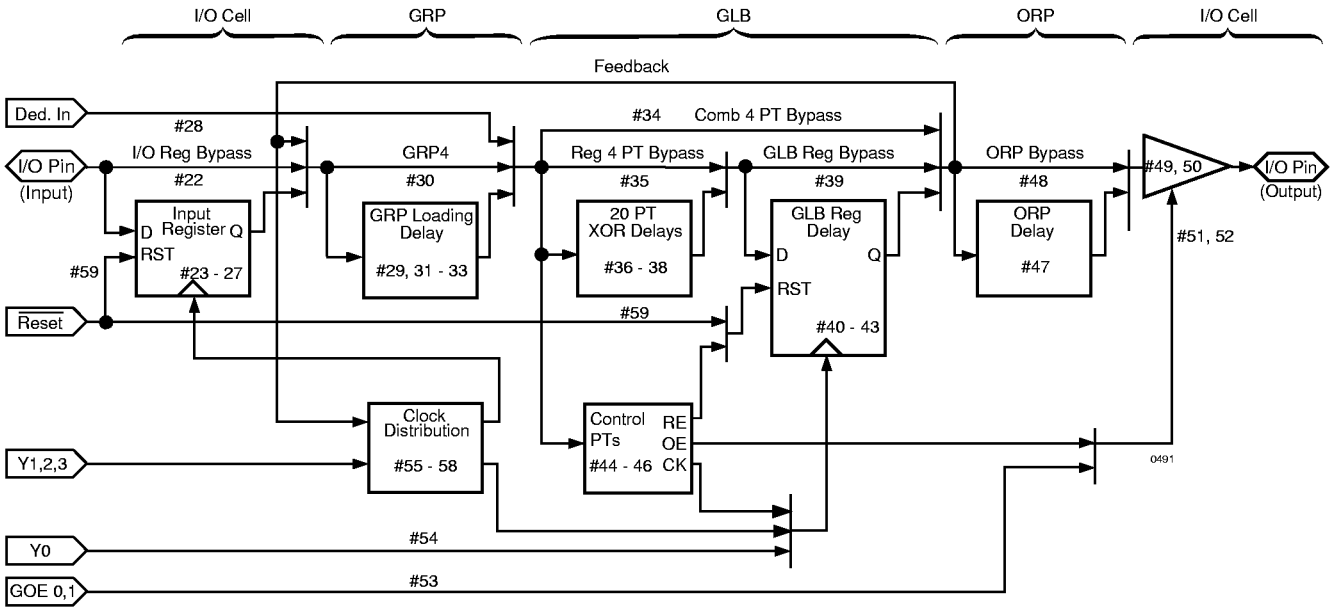

Derivations of tsu, th and tco from the Product Term Clock[1]

tsu = Logic + Reg su - Clock (min)
= (tiobp + tgrp4 + t20ptxor) + (tgsu) – (tiobp + tgrp4 + tptck(min))
= (#22 + #30 + #37) + (#40) – (#22 + #30 + #46)
2.2 ns = (0.3 + 2.0 + 5.0) + (0.1) – (0.3 + 2.0 + 2.9)

th = Clock (max) + Reg h - Logic
= (tiobp + tgrp4 + tptck(max)) + (tgh) – (tiobp + tgrp4 + t20ptxor)
= (#22 + #30 + #46) + (#41) - (#22 + #30 + #37)
3.5 ns = (0.3 + 2.0 + 4.0) + (4.5) – (0.3 + 2.0 + 5.0)

tco = Clock (max) + Reg co + Output
= (tiobp + tgrp4 + tptck(max)) + (tgco) + (torp + tob)
= (#22 + #30 + #46) + (#42) + (#47 + #49)
10.9 ns = (0.3 + 2.0 + 4.0) + (2.3) + (1.0 + 1.3)

Derivations of tsu, th and tco from the Clock GLB[1]

tsu = Logic + Reg su - Clock (min)
= (tiobp + tgrp4 + t20ptxor) + (tgsu) – (tgy0(min) + tgco + tgcp(min))
= (#22 + #30 + #37) + (#40) – (#54 + #42 + #56)
2.9 ns = (0.3 + 2.0 + 5.0) + (0.1) – (1.4 + 2.3 + 0.8)

th = Clock (max) + Reg h - Logic
= (tgy0(max) + tgco + tgcp(max)) + (tgh) – (tiobp + tgrp4 + t20ptxor)
= (#54 + #42 + #56) + (#41) – (#22 + #30 + #37)
2.7 ns = (1.4 + 2.3 + 1.8) + (4.5) – (0.3 + 2.0 + 5.0)

tco = Clock (max) + Reg co + Output
= (tgy0(max) + tgco + tgcp(max)) + (tgco) + (torp + tob)
= (#54 + #42 + #56) + (#42) + (#47 + #49)
5.5 ns = (1.4 + 2.3 + 1.8) + (2.3) + (1.0 + 1.3)

1. Calculations are based upon timing specifications for the ispLSI and pLSI 1032E-125.

Table 2-0042a/1032E

Maximum GRP Delay vs GLB Loads

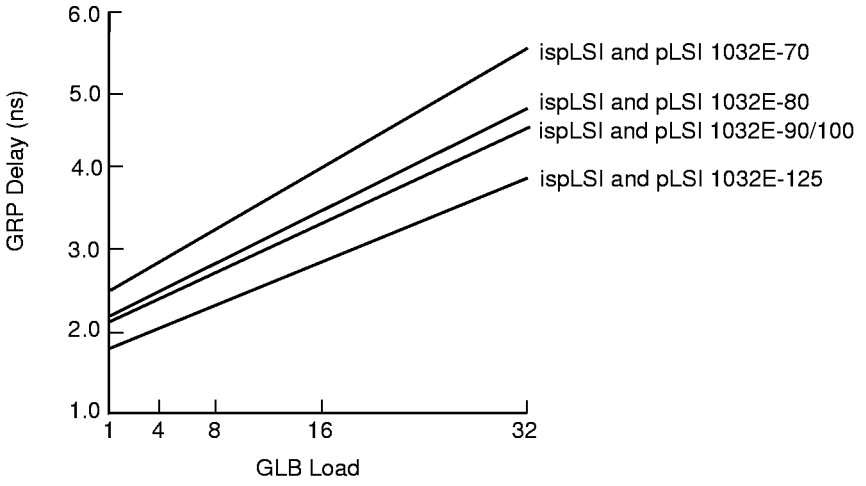

Power Consumption

Power consumption in the ispLSI and pLSI 1032E device depends on two primary factors: the speed at which the device is operating, and the number of product terms used. Figure 3 shows the relationship between power and operating speed.

Figure 3. Typical Device Power Consumption vs fmax

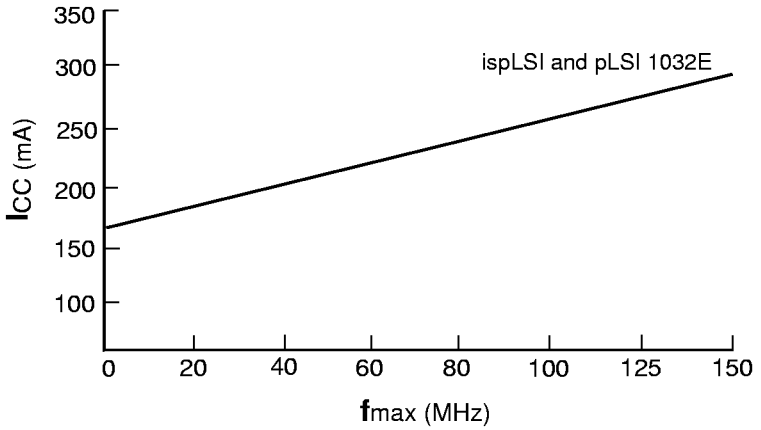

Notes: Configuration of eight 16-bit counters
Typical current at 5V, 25°C

I_{CC} can be estimated for the ispLSI and pLSI 1032E using the following equation:

I_{CC}(mA) = 15 + (# of PTs * 0.59) + (# of nets * Max freq * 0.0078)

Where:
- # of PTs = Number of Product Terms used in design
- # of nets = Number of Signals used in device
- Max freq = Highest Clock Frequency to the device (in MHz)

The I_{CC} estimate is based on typical conditions (V_{CC} = 5.0V, room temperature) and an assumption of four GLB loads on average exists. These values are for estimates only. Since the value of I_{CC} is sensitive to operating conditions and the program in the device, the actual I_{CC} should be verified.

0127/1032E

Pin Description

NAME	PLCC PIN NUMBERS	TQFP PIN NUMBERS	DESCRIPTION
I/O 0 - I/O 3 I/O 4 - I/O 7 I/O 8 - I/O 11 I/O 12 - I/O 15 I/O 16 - I/O 19 I/O 20 - I/O 23 I/O 24 - I/O 27 I/O 28 - I/O 31 I/O 32 - I/O 35 I/O 36 - I/O 39 I/O 40 - I/O 43 I/O 44 - I/O 47 I/O 48 - I/O 51 I/O 52 - I/O 55 I/O 56 - I/O 59 I/O 60 - I/O 63	26, 27, 28, 29, 30, 31, 32, 33, 34, 35, 36, 37, 38, 39, 40, 41, 45, 46, 47, 48, 49, 50, 51, 52, 53, 54, 55, 56, 57, 58, 59, 60, 68, 69, 70, 71, 72, 73, 74, 75, 76, 77, 78, 79, 80, 81, 82, 83, 3, 4, 5, 6, 7, 8, 9, 10, 11, 12, 13, 14, 15, 16, 17, 18	17, 18, 19, 20, 21, 22, 23, 28, 29, 30, 31, 32, 33, 34, 35, 36, 40, 41, 42, 43, 44, 45, 46, 47, 48, 53, 54, 55, 56, 57, 58, 59, 67, 68, 69, 70, 71, 72, 73, 78, 79, 80, 81, 82, 83, 84, 85, 86, 90, 91, 92, 93, 94, 95, 96, 97, 98, 3, 4, 5, 6, 7, 8, 9	Input/Output Pins - These are the general purpose I/O pins used by the logic array.
GOE 0/IN 4[3]	67	66	This is a dual function pin. It can be used either as Global Output Enable for all I/O cells or it can be used as a dedicated input pin.
GOE 1/IN 5[3]	84	87	This is a dual function pin. It can be used either as Global Output Enable for all I/O cells or it can be used as a dedicated input pin.
IN 6, IN 7	2, 19	89, 10	Dedicated input pins to the device.
$\overline{\text{ispEN}}$/NC[1,2]	23	14	Input - Dedicated in-system programming enable input pin. This pin is brought low to enable the programming mode. The MODE, SDI, SDO and SCLK options become active.
SDI/IN 0[2]	25	16	Input - This pin performs two functions. When $\overline{\text{ispEN}}$ is logic low, it functions as an input pin to load programming data into the device. SDI/IN 0 is also used as one of the two control pins for the isp state machine. It is a dedicated input pin when $\overline{\text{ispEN}}$ is logic high.
MODE/IN 1[2]	42	37	Input - This pin performs two functions. When $\overline{\text{ispEN}}$ is logic low, it functions as pin to control the operation of the isp state machine. It is a dedicated input pin when $\overline{\text{ispEN}}$ is logic high.
SDO/IN 2[2]	44	39	Output/Input - This pin performs two functions. When $\overline{\text{ispEN}}$ is logic low, it functions as an output pin to read serial shift register data. It is a dedicated input pin when $\overline{\text{ispEN}}$ is logic high.
SCLK/IN 3[2]	61	60	Input - This pin performs two functions. When $\overline{\text{ispEN}}$ is logic low, it functions as a clock pin for the Serial Shift Register. It is a dedicated input pin when $\overline{\text{ispEN}}$ is logic high.
$\overline{\text{RESET}}$	24	15	Active Low (0) Reset pin which resets all of the GLB and I/O registers in the device.
Y0	20	11	Dedicated Clock input. This clock input is connected to one of the clock inputs of all of the GLBs on the device.
Y1	66	65	Dedicated Clock input. This clock input is brought into the clock distribution network, and can optionally be routed to any GLB on the device.
Y2	63	62	Dedicated Clock input. This clock input is brought into the clock distribution network, and can optionally be routed to any GLB and/or any I/O cell on the device.
Y3	62	61	Dedicated Clock input. This clock input is brought into the clock distribution network, and can optionally be routed to any I/O cell on the device.
GND	1, 22, 43, 64	13, 38, 63, 88	Ground (GND)
VCC	21, 65	12, 64	Vcc
NC[1]		1, 2, 24, 25, 26, 27, 49, 50, 51, 52, 74, 75, 76, 77, 99, 100	No connect.

Table 2-0002A/1032E

1. NC pins are not to be connected to any ative signals, Vcc or GND.
2. Pins have dual function capability for ispLSI 1032E only.
3. Pins have dual function capability which is software selectable.

Pin Configurations

ispLSI and pLSI 1032E 84-Pin PLCC Pinout Diagram

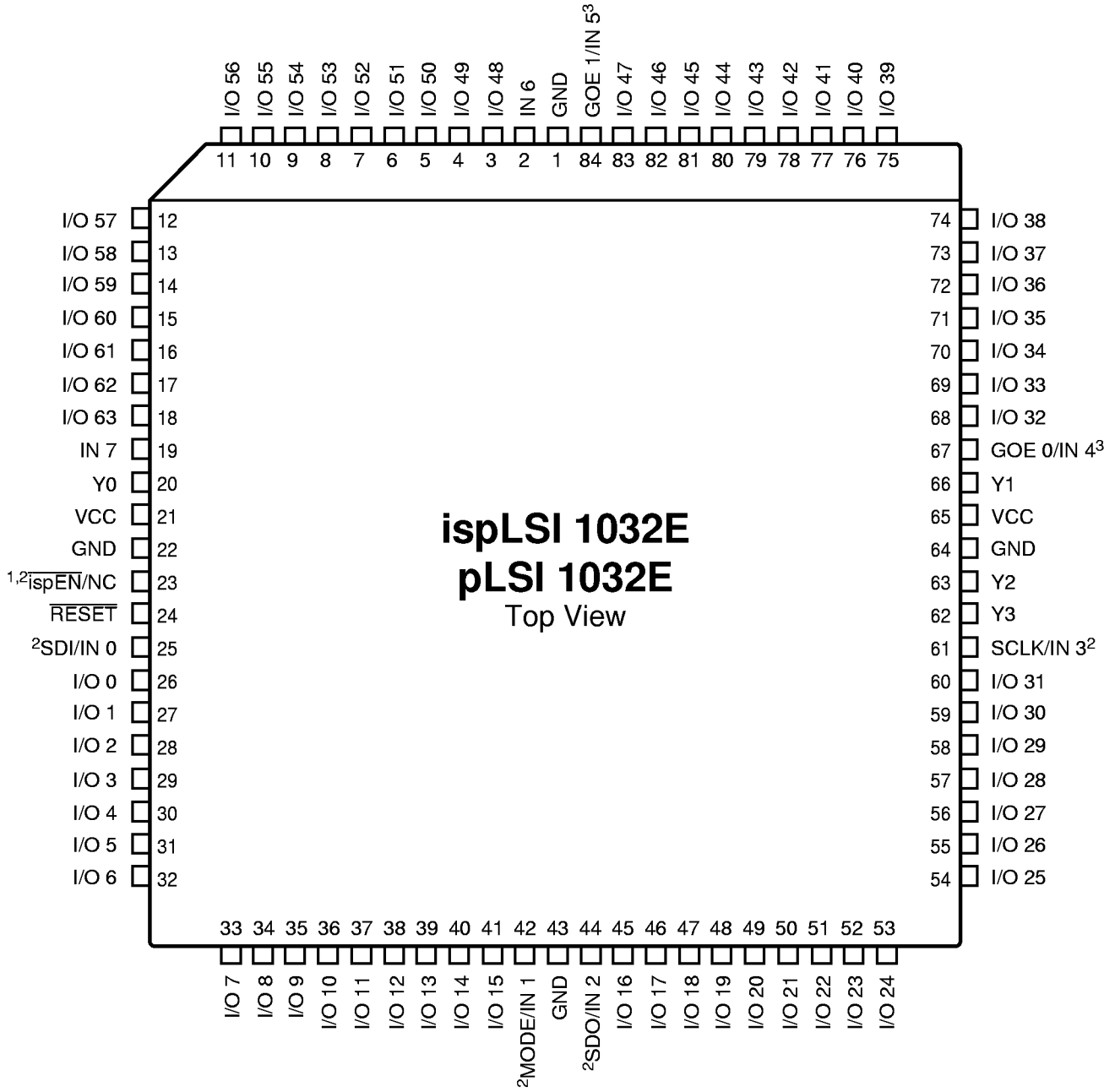

1. NC pins are not to be connected to any active signals, Vcc or GND.
2. Pins have dual function capability for ispLSI 1032E only (except pin 23, which is $\overline{\text{ispEN}}$ only).
3. Pins have dual function capability which is software selectable.

0123-32-isp

Pin Configurations

ispLSI 1032E 100-Pin TQFP Pinout Diagram

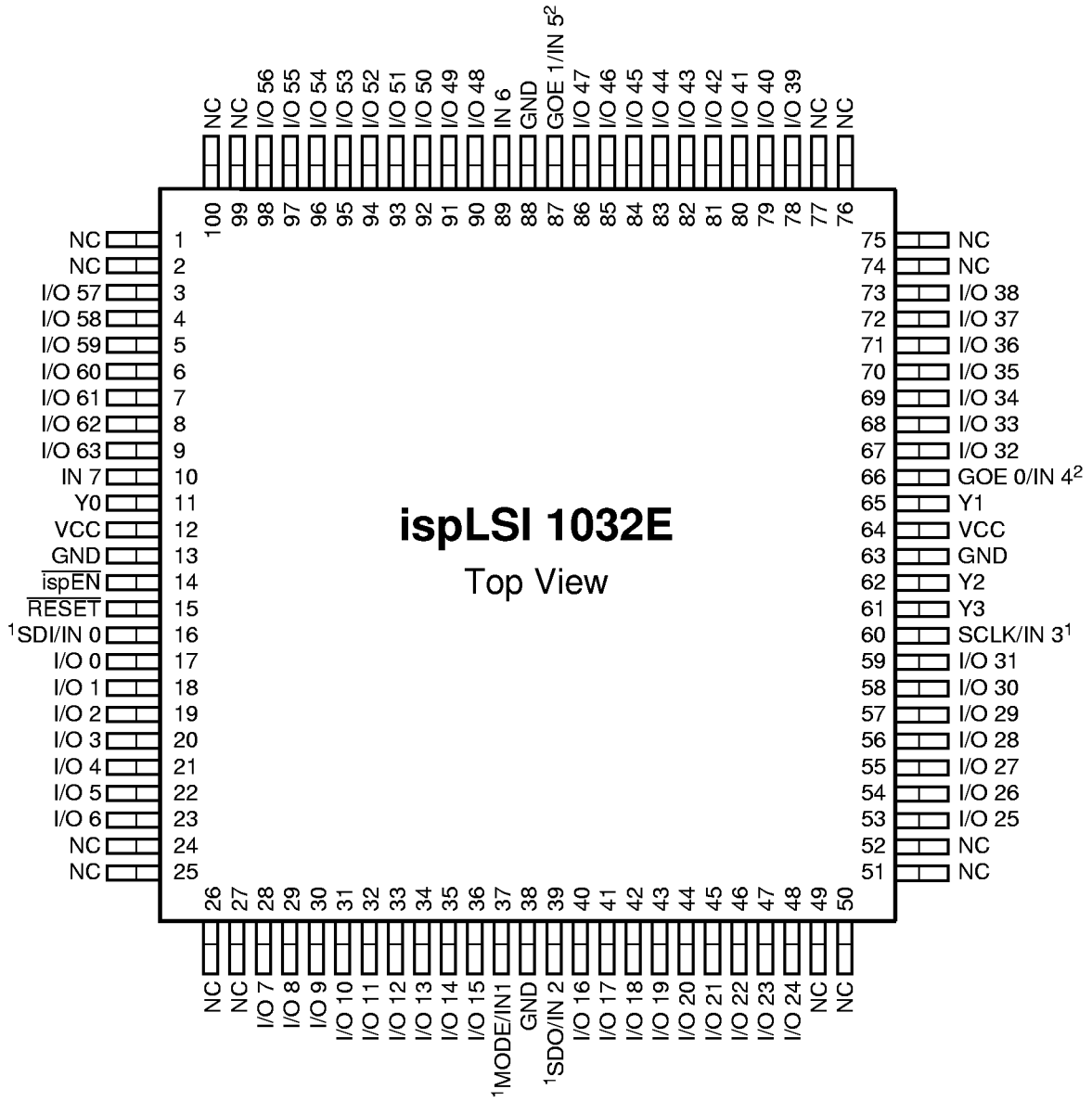

1. Pins have dual function capability.
2. Pins have dual function capability which is software selectable.

0766A-32E-isp

Part Number Description

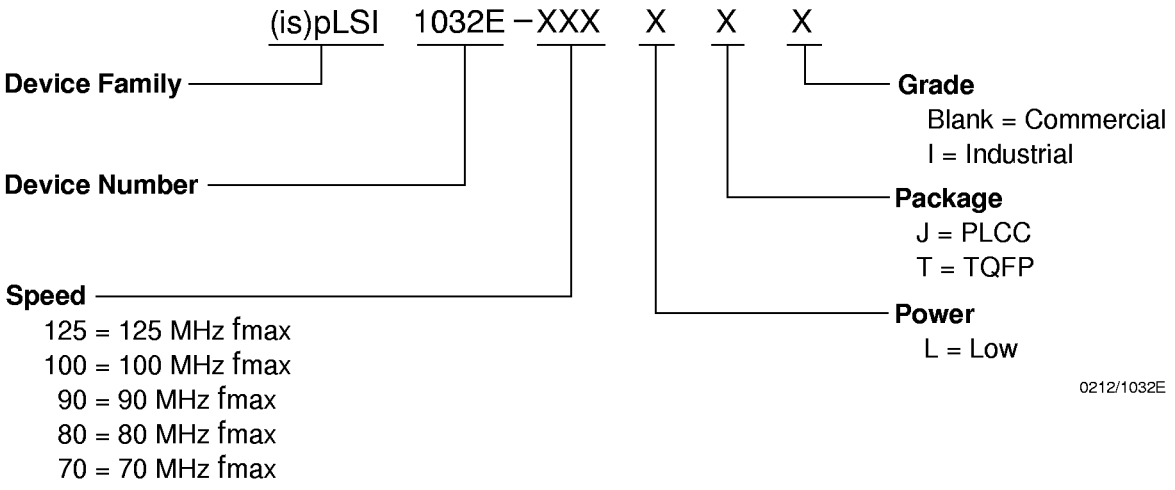

0212/1032E

ispLSI and pLSI 1032E Ordering Information

COMMERCIAL

FAMILY	fmax (MHz)	tpd (ns)	ORDERING NUMBER	PACKAGE
ispLSI	125	7.5	ispLSI 1032E-125LJ	84-Pin PLCC
	125	7.5	ispLSI 1032E-125LT	100-Pin TQFP
	100	10	ispLSI 1032E-100LJ	84-Pin PLCC
	100	10	ispLSI 1032E-100LT	100-Pin TQFP
	90	10	ispLSI 1032E-90LJ*	84-Pin PLCC
	90	10	ispLSI 1032E-90LT*	100-Pin TQFP
	80	12	ispLSI 1032E-80LJ*	84-Pin PLCC
	80	12	ispLSI 1032E-80LT*	100-Pin TQFP
	70	15	ispLSI 1032E-70LJ	84-Pin PLCC
	70	15	ispLSI 1032E-70LT	100-Pin TQFP
pLSI	125	7.5	pLSI 1032E-125LJ	84-Pin PLCC
	100	10	pLSI 1032E-100LJ	84-Pin PLCC
	90	10	pLSI 1032E-90LJ*	84-Pin PLCC
	80	12	pLSI 1032E-80LJ*	84-Pin PLCC
	70	15	pLSI 1032E-70LJ	84-Pin PLCC

*Use ispLSI 1032E-100 for all new designs.

Table 2-0041A/1032E

INDUSTRIAL

FAMILY	fmax (MHz)	tpd (ns)	ORDERING NUMBER	PACKAGE
ispLSI	70	15	ispLSI 1032E-70LJI	84-Pin PLCC
	70	15	ispLSI 1032E-70LTI	100-Pin TQFP

Table 2-0041B/1032E

Note: Use ispLSI for new designs.

68-Pin JLCC Package

Dimensions in Inches MIN. / MAX.

(Dimensions in millimeters, shown in parentheses, are for reference only)

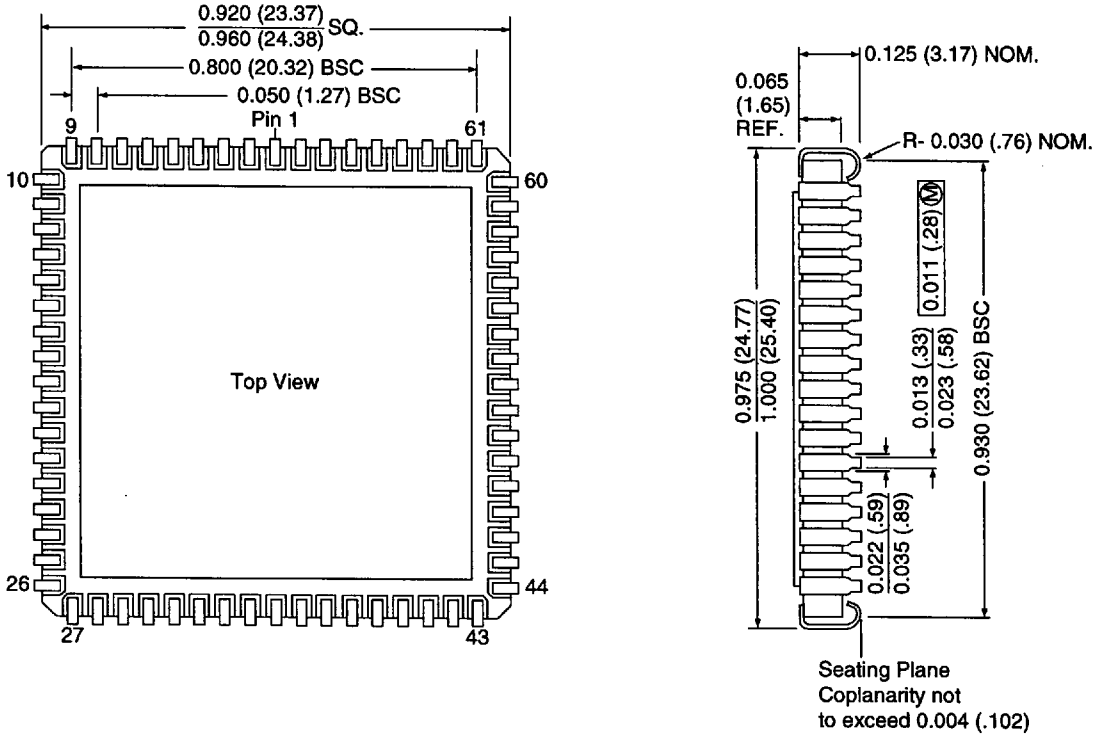

84-Pin PLCC Package

Dimensions in Inches MIN. / MAX.

(Dimensions in millimeters, shown in parentheses, are for reference only)

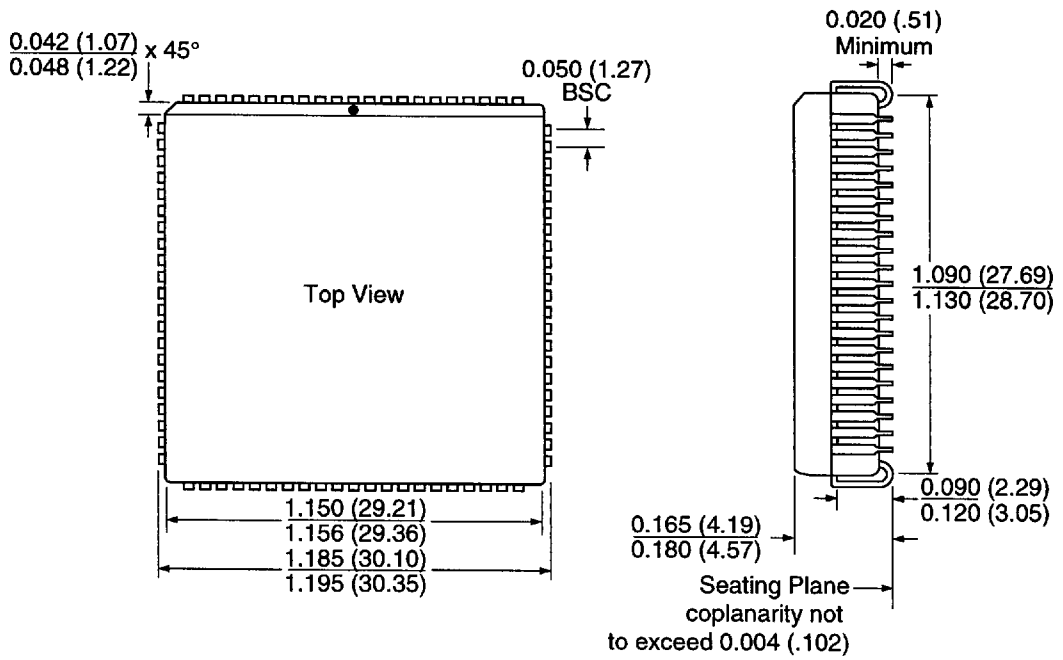

5386949 0005388 997

84-Pin CPGA Package

Dimensions in Inches MIN. / MAX.

(Dimensions in millimeters, shown in parentheses, are for reference only)

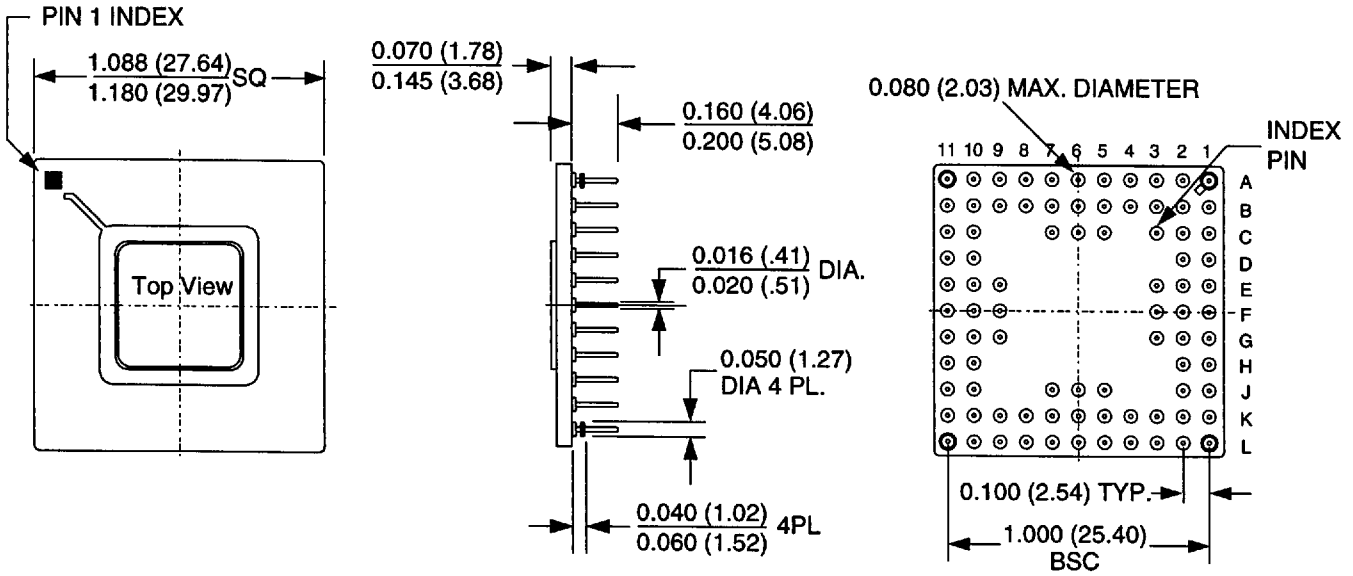

100-Pin TQFP Package
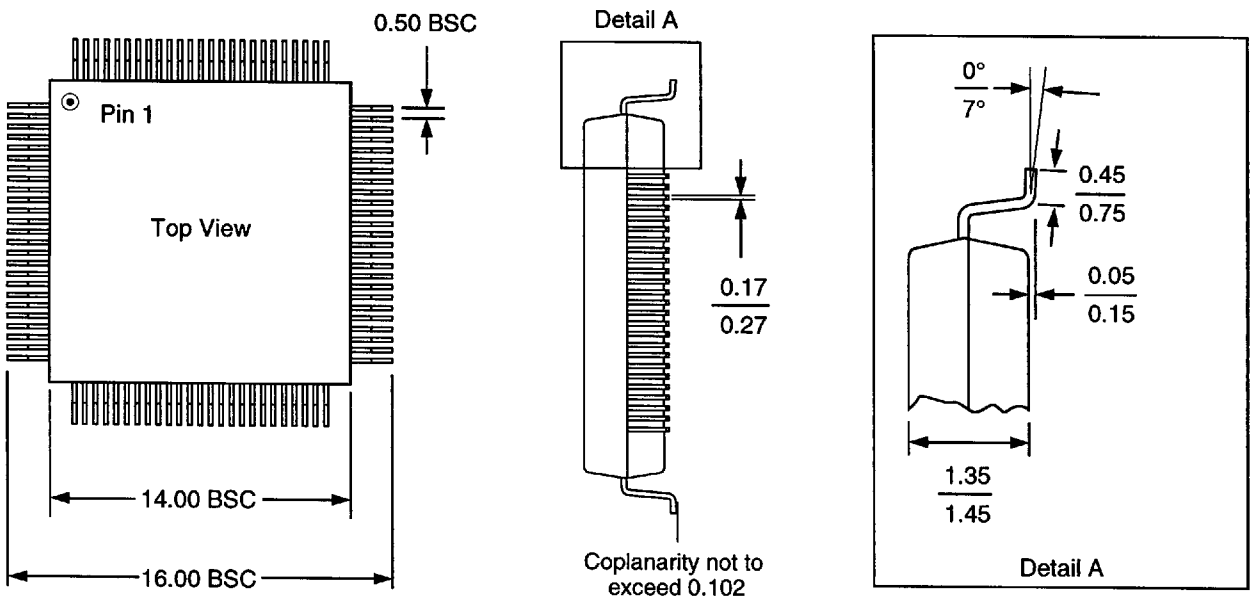
Dimensions in Millimeters MIN. / MAX.