SAA1094-2 Tone Ringer IC (14-Pin Plastic Package TO-116)

This integrated CMOS circuit replaces the customary electromechanical telephone ringer and calls the subscriber by a melodic tone sequence, using a small magnetic or piezoceramic sound transducer. The tone ringer circuit, together with its transducer is powered by the ringing current from the exchange. This makes it compatible with the conventional telephone network and, furthermore, no battery or mains connections are needed.

Functional Description

The tone ringer circuit normally derives the power required for its operation from the ringing AC supplied by the exchange via lines a and b. Together with the loop resistance, the 1 µF isolating capacitor and a 2.2 kΩ resistor, the ringing generator in the exchange operates as an alternating-current source. The 2.2 kΩ resistor is needed to ensure a minimum impedance. The supplied alternating current is fed to pins 5 and 7 of the SAA1094-2 and is rectified by means of an integrated bridge circuit in the SAA1094-2. The rectified current charges the electrolytic capacitor at pins 4 and 6. The direct voltage produced across this capacitor mainly depends on the loop resistance and on the ringing frequency and is limited to the operating voltage V_Z of the Zener diode integrated in the SAA1094-2. Tone ringing is switched on when the DC voltage across C_1 has reached the value of about 6 V. The switch-off threshold at decreasing supply voltage is about 3 V.

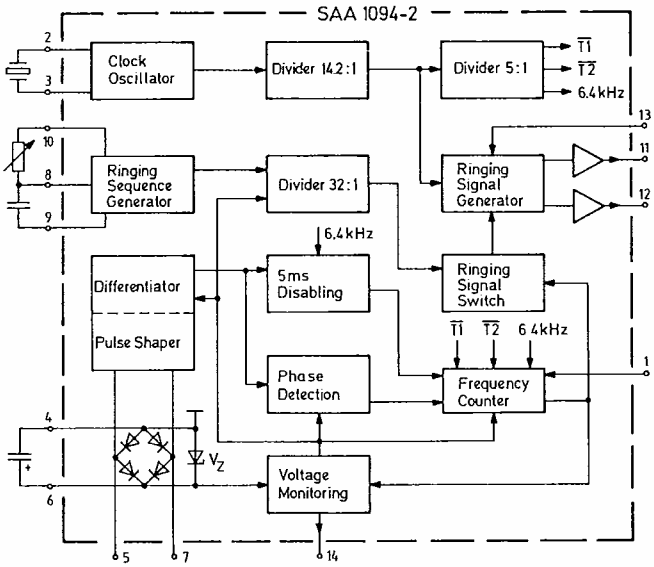

SAA1094-2 Block Diagram

TEA1045 Telephone Subset Amplifier (18-Pin Plastic Package)

Features

- Automatic compensation of line losses by using a gain-controlled amplifier
- Very accurate (±2 dB) send, receive and VF (voice frequency) gains to achieve optimum system performance
- Low supply current obtained entirely from a small proportion of the line current
- Cancellation circuit to achieve required reduction in sidetone
- Balanced microphone input circuit for reduced sidetone
- Operation can be achieved if the subsets are paralleled
- Stabilised D.C. output for powering external VF oscillator
- Send, VF and receive gains can be preset externally by choice of resistors
- Both low and high frequency characteristics (usually roll off's) of the send gain can be separately adjusted by external capacitors
- Control of quiescent operating point on curve relating D.C. line current with amplifier gain
- Low send and receive noise
- Mute facility for send and receive amplifiers during dialling

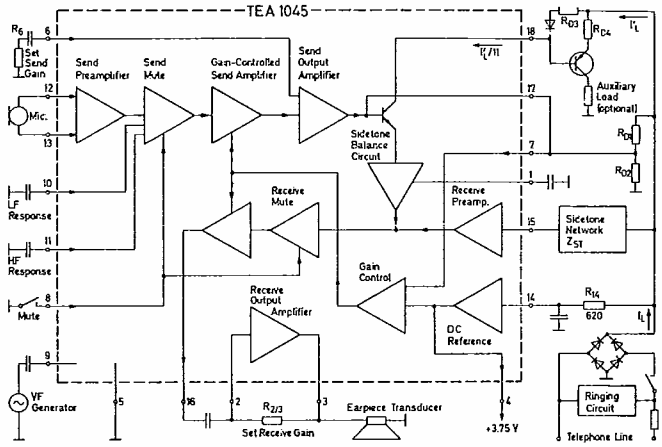

TEA1045 Block Diagram and Application Circuit

Description

The TEA1045 is a bipolar integrated circuit specially designed for use in a telephone subset to amplify the output from the handset microphone to the telephone line and to amplify the incoming speech on the line to the earpiece transducer. The microphone and earpiece transducers can be of the same type and construction.

The overall characteristics of the TEA1045 are very well defined and controlled. Both send and receive gains within the integrated circuit have only a small overall spread of 4 dB (±26% about nominal). With line impedance and set-gain resistors closely controlled the performance of the subset is well defined in the system.

ZSY0,7 Silicon Click Suppressor (DO-35 Package)

Monolithic integrated analog circuit with symmetric V/I-characteristic for use as voltage limiter, e.g. as click suppressor in telephone subsets.

Type	Maximum Ratings				Characteristics at $T_A = 25\,°C$				
	Operating Current at $T_A = 25\,°C$	Surge Current at t = 100 µs	Power Dissipation at $T_A = 25\,°C$	Junction Temperature	Forward Voltage Drop at $\lvert I_F \rvert = 100$ mA	Dynamic Resistance at $\lvert I_F \rvert = 2$ mA, f = 1 kHz	Residual Attenuation at $R_G = R_L = 600\,\Omega$, f = 0.2...4 kHz Voltage Level at the Generator −4 N	−0,5 N	0 N
	$\pm I_F$ mA	$\pm I_{FSM}$ A	P_{tot} mW	T_j °C	$\lvert V_F \rvert$ V	$r_F\,\Omega$	D N	D N	D N
ZSY0,7	150	1	300	150	<1.35	20 (<29)	<0.05	0.05	1.8 (>0.5)