Approved by:
Checked by:
Issued by:

SPECIFICATION

PRODUCT: SAW FILTER

MODEL: HF738901S （K7257D） SIP5D

HOPE MICROELECTRONICS CO.,LIMITED

Tel:+86-755-82973806 Fax:+86-755-82973550 E-mail: sales@hoperf.com http://www.hoperf.com

1.Construction

1.1 Dimension and materials

Type : F738901S

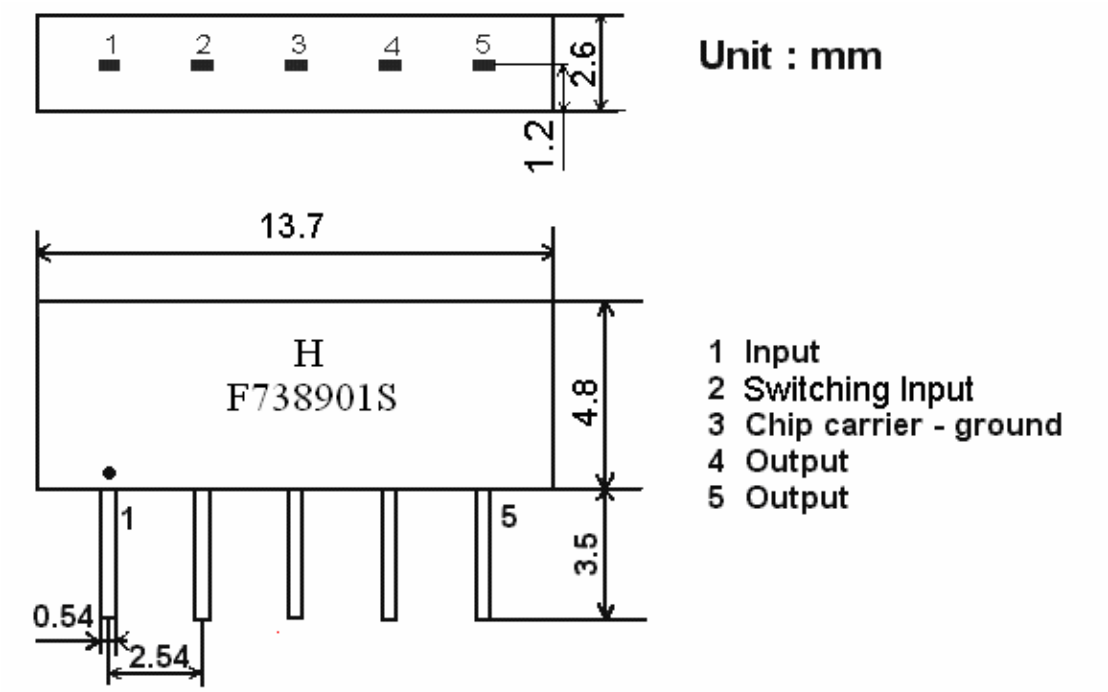

1.2. Circuit construction, measurement circuit

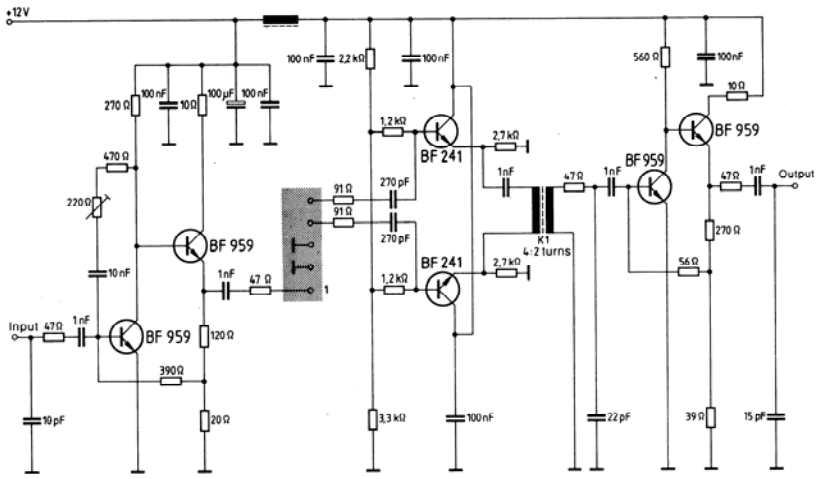

Test circuit for SIP-5 filter
Input impedance of the symmetrical post-amplifier: 2 kΩ in parallel with 3 pF

2.Characteristics

<u>Standard atmospheric conditions</u>

Unless otherwise specified , the standard rang of atmospheric conditions for making measurements and tests is as follows;

Ambient temperature : 15℃ to 35℃

Relative humidity : 25% to 85%

Air pressure : 86kPa to 106kPa

Operating temperature rang

Operating temperature rang is the rang of ambient temperatures in which the filter can be operated continuously. -10℃ ~ +60℃

Storage temperature rang

Storage temperature rang is the rang of ambient temperatures at which the filter can be stored without damage.
Conditions are as specified elsewhere in these specifications. -40℃ ~ +70℃

Reference temperature +25℃

2.1 Maximum Rating

DC voltage	**VDC**	**12**	**V**	**Between any terminals**
AC voltage	**Vpp**	**10**	**V**	**Between any terminals**

2.2 Electrical Characteristics

Characteristics in B/G,L/L' mode (switching input pin 2 connected to ground pin 3)

Source impedance Zs=50Ω

Load impedance Z_L=2kΩ//3pF T_A=25℃

Item		Freq	min	typ	max	
Insertion attenuation Reference level		37.40MHz	14.5	16.5	18.5	dB
Relative attenuation		38.90MHz	4.5	6.0	7.5	dB
		33.90MHz	-	7.9	-	dB
		34.47MHz	-1.0	0.5	2.0	dB
		33.40MHz	28.0	40.0	-	dB
		33.05MHz	-	36.0	-	dB
		30.90MHz	42.0	55.0	-	dB
		31.90MHz	42.0	56.0	-	dB
		32.40MHz	42.0	54.0	-	dB
		40.15MHz	35.0	47.0	-	dB
		40.40MHz	40.0	50.0	-	dB
		41.40MHz	40.0	50.0	-	dB
Sidelobe	25.00~31.90MHz		35.0	44.0		dB
	40.40~45.00MHz		35.0	41.0		dB
Reflected wave signal suppression 1.2 us … 6.0 us after main pulse (test pulse 250 ns , carrier frequency 37.40 MHz)			40.0	50.0		dB

Feedthrough signal suppression 1.2 us … 6.0 us after main pulse (test pulse 250 ns , carrier frequency 37.40 MHz)	42.0	52.0		dB
Temperature coefficient	-72			ppm/k

Characteristics in M/N mode (switching input pin 2 connected to input pin 1)

Source impedance Zs=50Ω

Load impedance Z_L=2kΩ//3pF T_A=25℃

Item		Freq	min	Typ	max	
Insertion attenuation Reference level		37.40MHz	14.5	16.5	18.5	dB
Relative attenuation		38.90MHz	4.9	6.4	7.9	dB
		35.32MHz	1.1	2.6	4.1	dB
		34.40MHz	22.0	35.0	-	dB
		32.90MHz	35.0	42.0	-	dB
		40.40MHz	40.0	47.0	-	dB
Sidelobe	25.00~32.90MHz		33.0	41.0		dB
	39.50~45.00MHz		30.0	37.0		dB
Reflected wave signal suppression 1.2 us … 6.0 us after main pulse (test pulse 250 ns , carrier frequency 37.40 MHz)			40.0	50.0		dB
Feedthrough signal suppression 1.2 us … 6.0 us after main pulse (test pulse 250 ns , carrier frequency 37.40 MHz)			-	48.0		dB
Temperature coefficient			-72			ppm/k

2.3 Environmental Performance Characteristics

Item Test condition	Allowable change of absolute Level at center frequency(dB)
High temperature test 70℃ 1000H	< 1.0
Low temperature test -40℃ 1000H	< 1.0
Humidity test 40℃ 90-95% 1000H	< 1.0
Thermal shock -20℃==25℃==80℃ 20 cycle 30M 10M 30M	< 1.0
Solder temperature test Sold temp.260℃ for 10 sec.	< 1.0
Soldering Immerse the pins melt solder at 260℃+5/-0℃ for 5 sec.	More then 95% of total area of the pins should be covered with solder

2.4 Mechanical Test

Item Test condition	Allowable change of absolute Level at center frequency(dB)
Vibration test 600-3300rpm amplitude 1.5mm 3 directions 2 H each	<1.0
Drop test On maple plate from 1 m high 3 times	<1.0
Lead pull test Pull with 1 kg force for 30 seconds	<1.0
Lead bend test 90° bending with 500g weigh 2 times	<1.0

2.5 Voltage Discharge Test

Item Test condition	Allowable change of absolute Level at center frequency(dB)
Surge test Between any two electrode 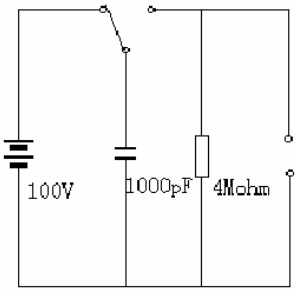	<1.0

2.6 Frequency response

Frequency response in B/G,L/L' mode

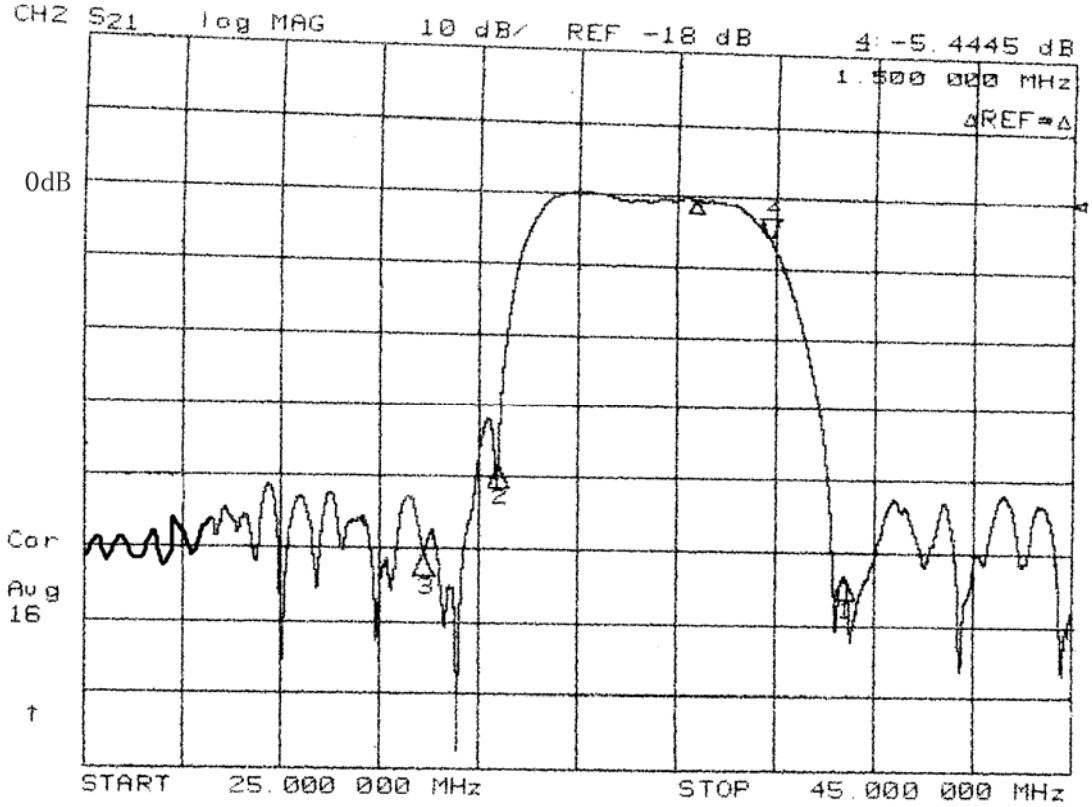

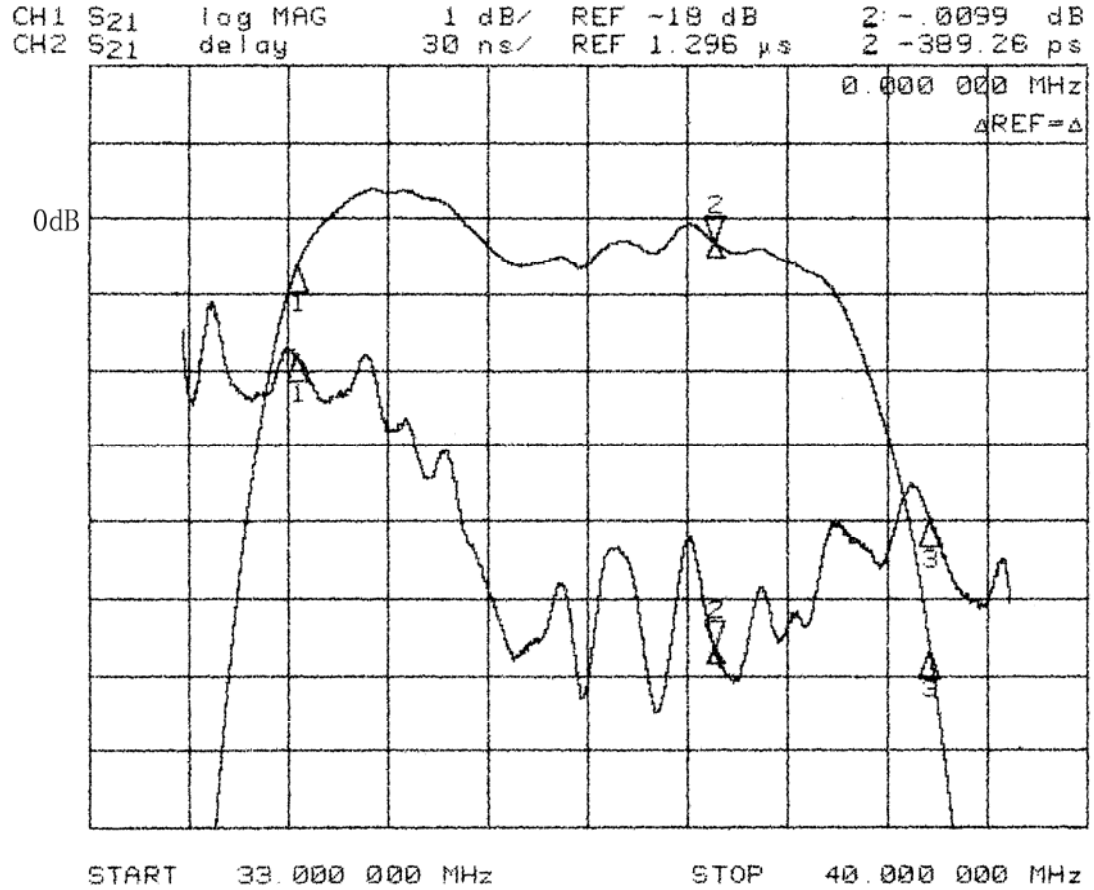

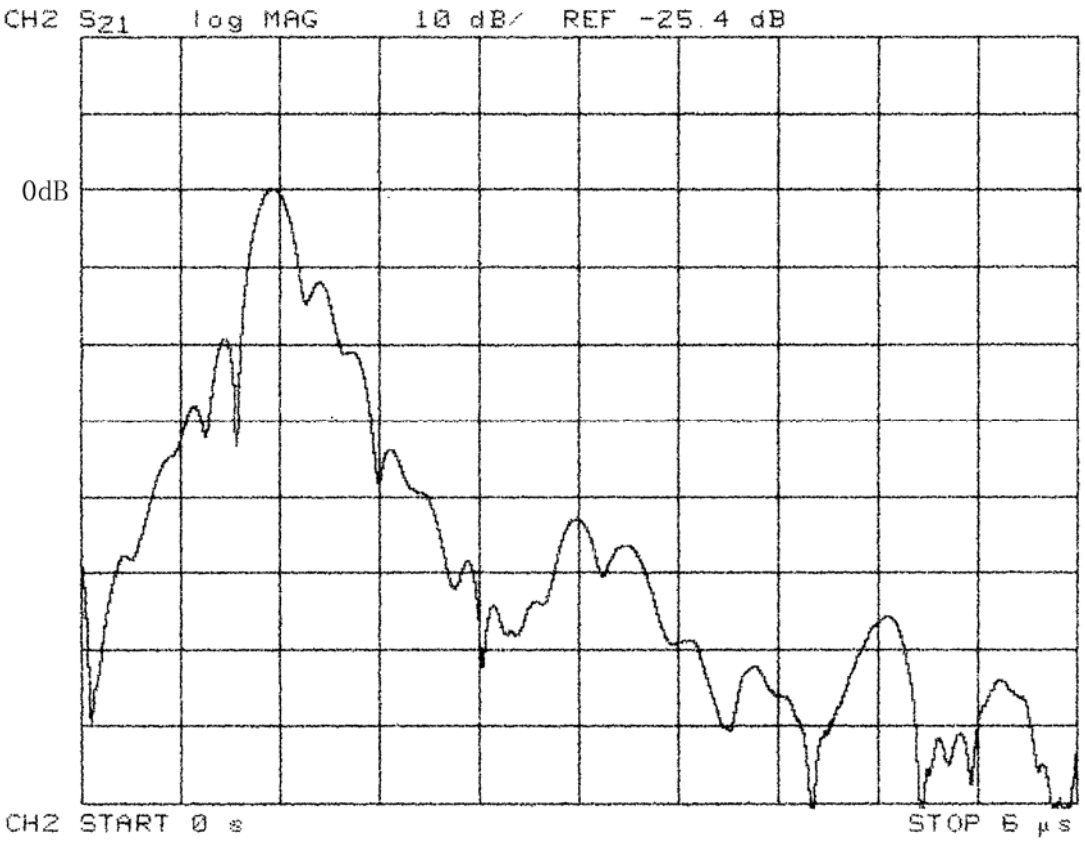

Frequency response in B/G,L/L' mode

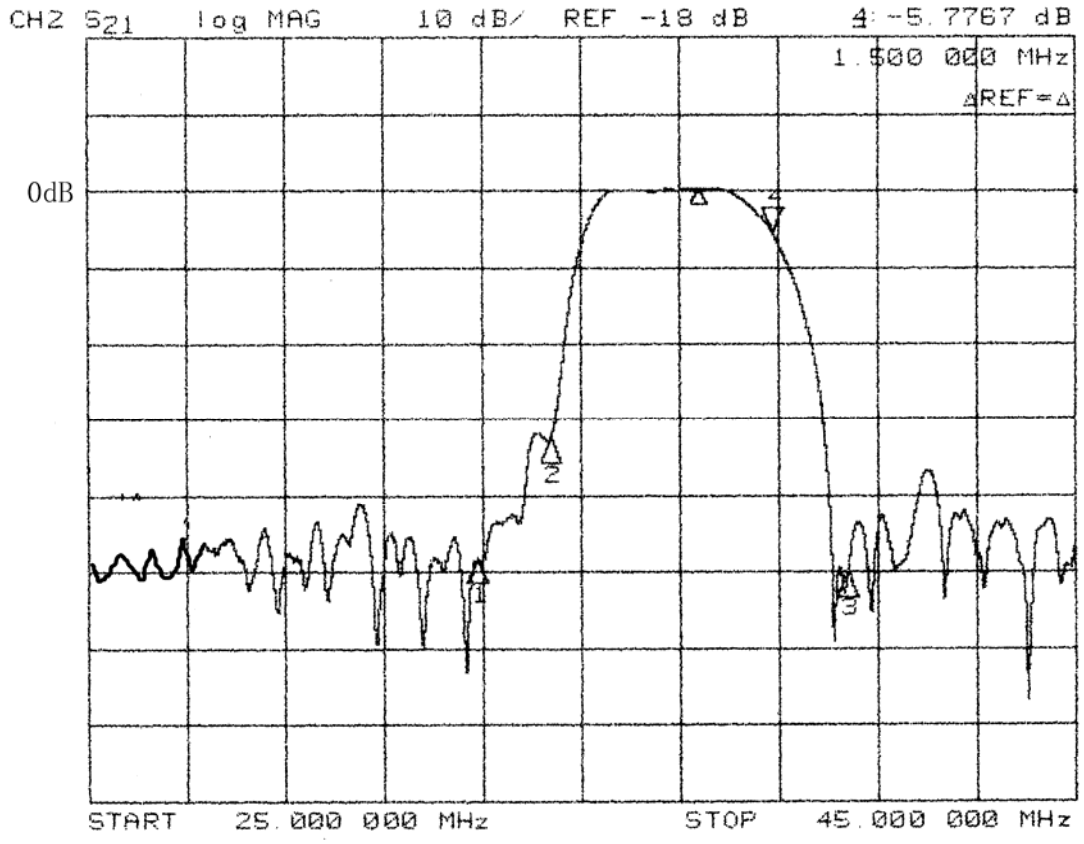

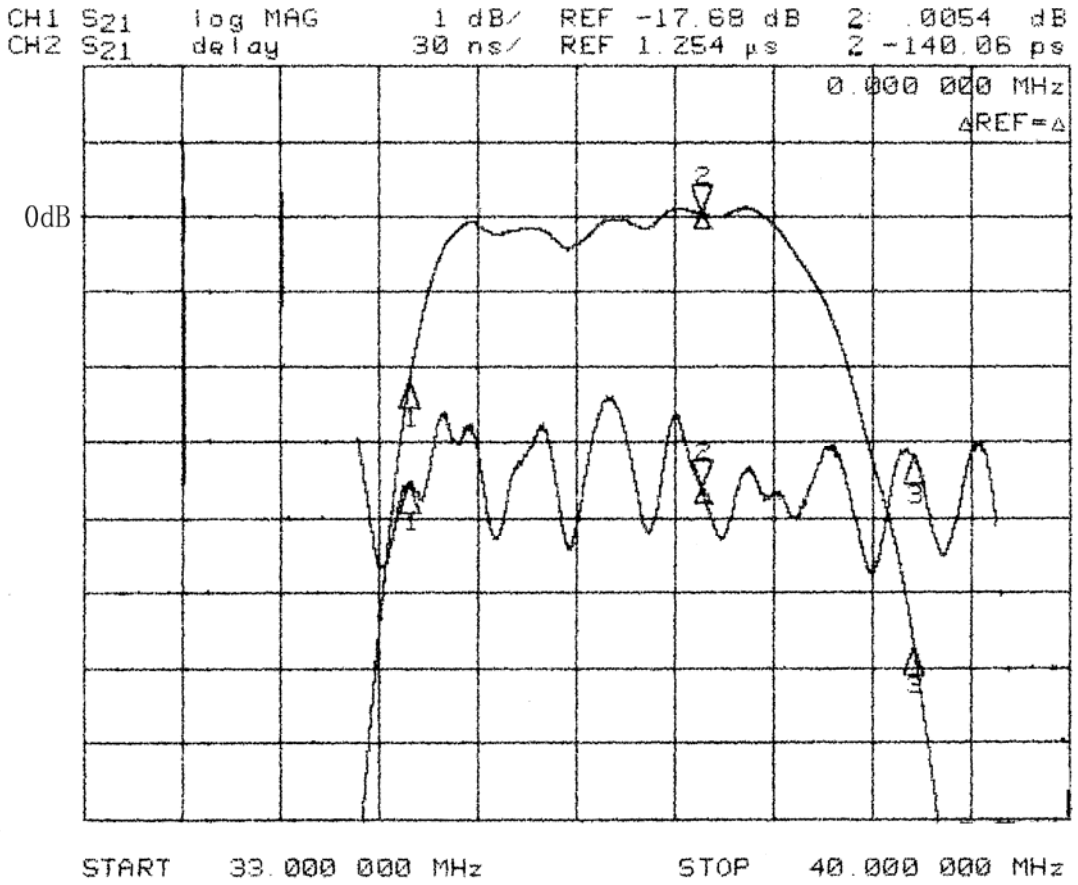
CH1 S21 log MAG 1 dB/ REF -17.68 dB 2: .0054 dB
CH2 S21 delay 30 ns/ REF 1.254 µs 2 -140.06 ps
0.000 000 MHz
ΔREF=Δ
0dB
START 33.000 000 MHz
STOP 40.000 000 MHz

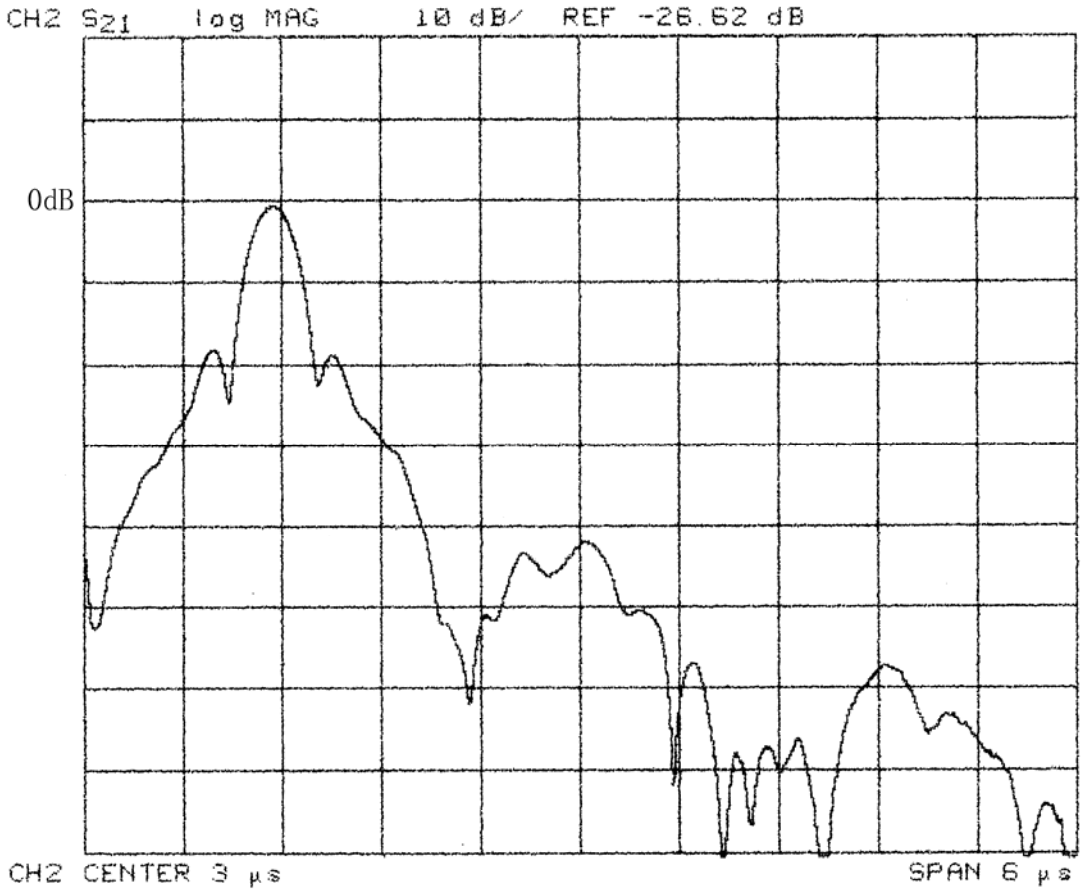
CH2 S21 log MAG 10 dB/ REF -26.62 dB
0dB
CH2 CENTER 3 µs
SPAN 6 µs