Miniature 10Base-T Interface Module with Enhanced Common Mode Attenuation

EPE6313S

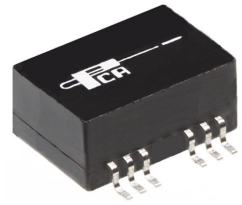

- Designed for use with Level One's LXT901 Chip
- Robust design allows to withstand current soldering proflies
- Complies with or exceeds IEEE 802.3, 10Base-T Standards

Electrical Parameters @ 25° C

Cut-Off Frequency (MHz)	Insertion Loss † (dB Max.)	Return Loss (dB Min.)	Attenuation (dB Min.)				Common Mode Rejection (dB Min.)	Crosstalk (dB Min.)
± 1.0	1-10 MHz	5-10 MHz	@ 20 MHz	@ 25 MHz	@ 30 MHz	@ 40 MHz	30-100 MHz	1-10 MHz
Xmit/Rcv	Xmit/Rcv	Xmit/Rcv	Xmit/Rcv	Xmit/Rcv	Xmit/Rcv	Xmit/Rcv	Xmit/Rcv	Between Channels
17/17	-1/-1	-15/-15	-5/-4	-14/-9	-24/-15	-30/-24	-30/-30	-30

• † Referenced to the Output Level Fundamental Frequency @ 5 MHz •

Schematic

Receive Channel

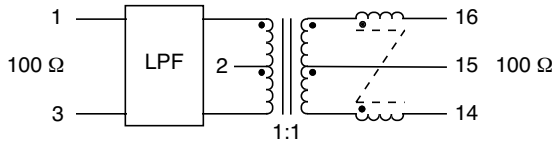

Transmit Channel

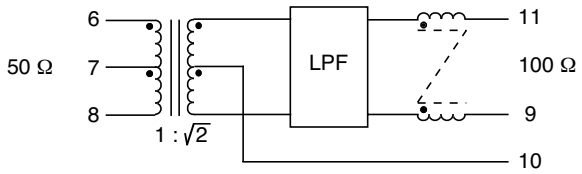

Package

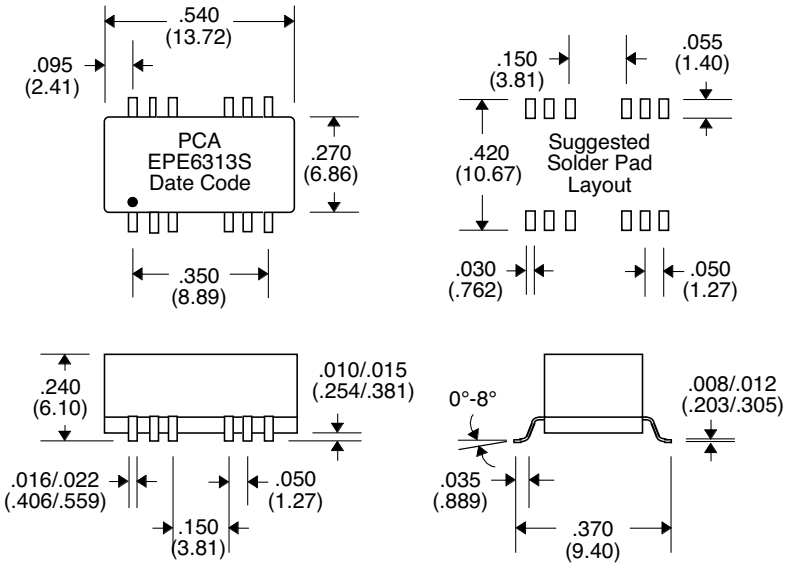

Unless Otherwise Specified Dimensions are in Inches /mm ± .010 /.25

PCA ELECTRONICS, INC.
16799 SCHOENBORN ST.
NORTH HILLS, CA 91343

Product performance is limited to specified parameters. Data is subject to change without prior notice.

CSE6313S Rev. Orig 5/6/03

TEL: (818) 892-0761
FAX: (818) 894-5791
http://www.pca.com