CATALOGUE NUMBER	LEAD FREE VERSION
7111S1015X01	7111S1015X01LF

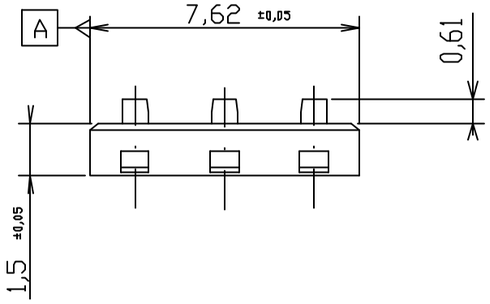

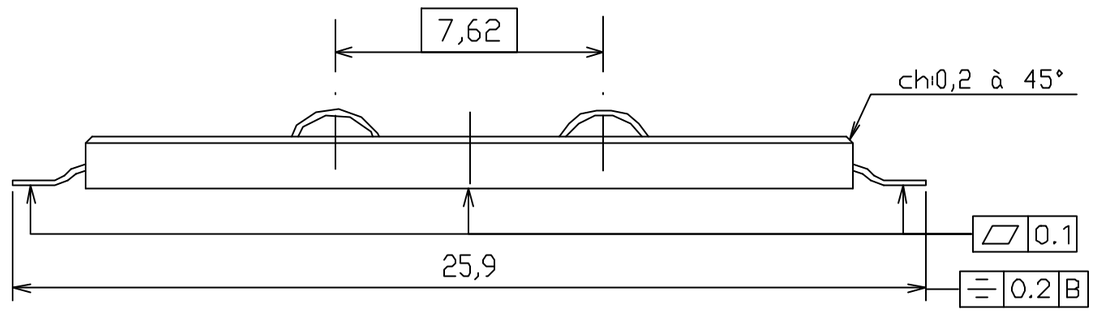

Layout onto PCB

Surface d'appui des contacts sur C.I.

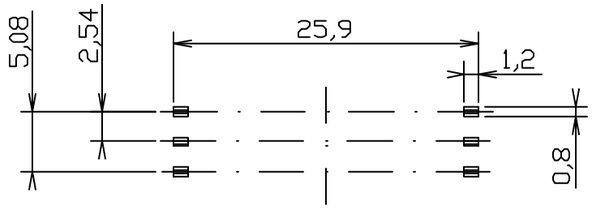

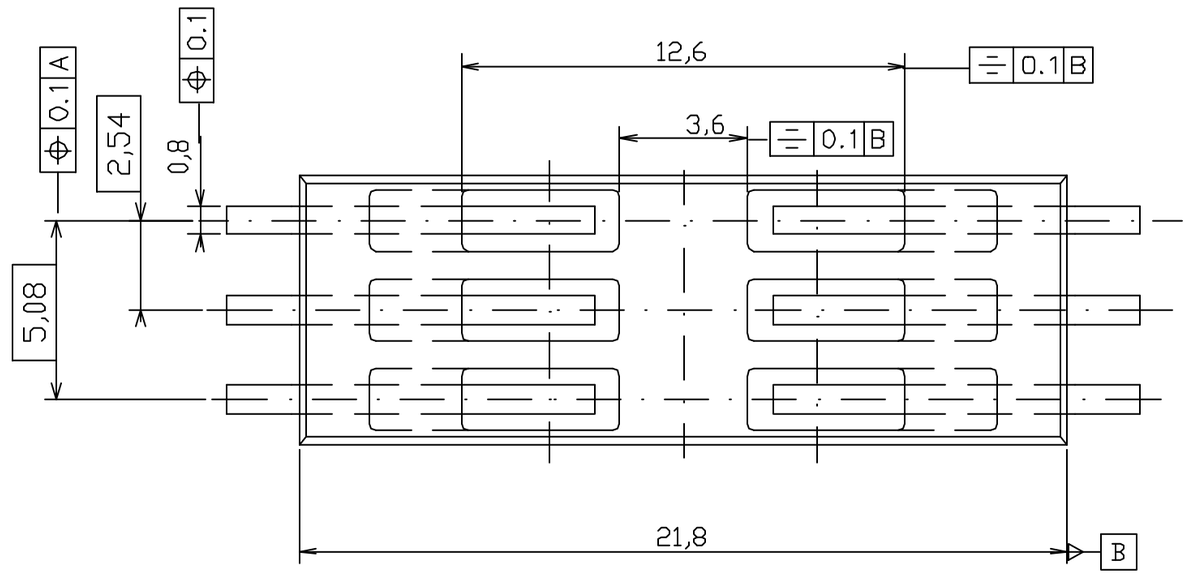

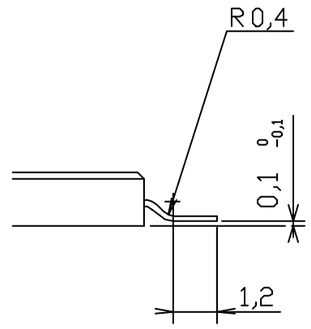

LEAD FREE VERSION:

"This product meets European Union Directives and other country regulations as described in GS-22-008"

The housing will withstand exposure to 260°C peak temperature for 10seconds in a convection reflow oven.

Sn Matte plating on solder tail for Lead Free Versions

EUROPEAN PROJECTION

mat'l. code				tolerances unless otherwise specified			CUSTOMER COPY	FCI ELECTRONICS www.fciconnect.com		
ltr	ecn no	dr	date	linear			projection	title S10 VXX 27789		
A	F20307	DLE	02.04.29							
B	I05-0167	NT	05.09.23							
				angles						
				dr	D LEGRAND	02.04.29	mm	prod. family SMART CARD		code 213
				eng	F TISSERAND	02.04.29		size A3	dwg no VJW 53712	sheet 1 of 1
				chr	N.TWINCY	05.09.23	scale			
				apd	N.TWINCY	05.09.23				
sheet index	revision sheet									

Tol.G:±0,1

form no. 7530-001-104

Tous droits strictement reservés. Reproduction ou communication à des tiers interdite sans notre accord écrit que ce soit sous authorisation écrite du propriétaire.
Propriété de c FCI Beaucoran S. A.
Droits de reproduction FCI Beaucoran S. A.

All rights strictly reserved. Reproduction or issue to third parties in any form not permitted without written authorizsty from the proprietor.
Property of FCI Beaucoran S. A.
Copyright FCI Beaucoran S. A.

PDM: Rev:B STATUS:Released Printed: Dec 07, 2005